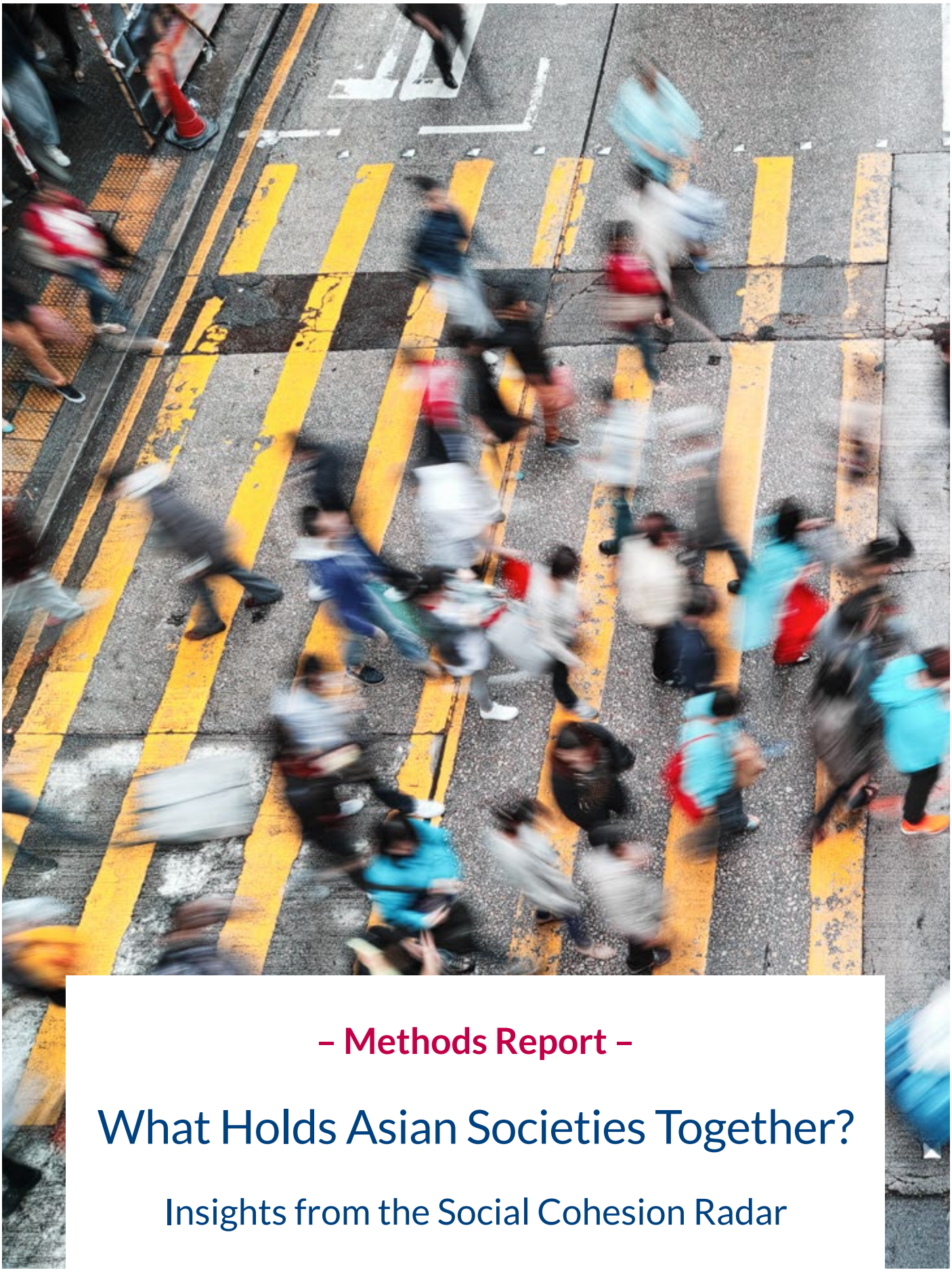

– Methods Report –

What Holds Asian Societies Together?

Insights from the Social Cohesion Radar

BertelsmannStiftung

What Holds Asian Societies Together? Insights from the Social Cohesion Radar

Methods Report

Authors
Georgi Dragolov[1]
Mandi Larsen[1]
Michael Koch[2]

[1] Bremen International Graduate School of Social Sciences, Jacobs University Bremen, Germany
[2] Institute for Sociology, Otto-von-Guericke Universität Magdeburg, Germany

Contact
Dr. Peter Walkenhorst
Senior Project Manager
Germany and Asia Program
Bertelsmann Stiftung
Phone +49 5241 81-81172
Fax +49 5241 81-681131
peter.walkenhorst@bertelsmann-stiftung.de

www.bertelsmann-stiftung.de
www.social-cohesion.net

Cover picture: estherpoon / Fotolia.com

Table of Contents

1 Introduction

This methods report provides a detailed documention of the methodology behind the measurement of social cohesion in 22 Asian societies as presented in the edited volume, titled *What Holds Asian Societies Together? Insights from the Social Cohesion Radar* (Bertelsmann Stiftung, 2017).

The volume offers an assessment of the degree of social cohesion in the following societies of South, Southeast, and East Asia: Afghanistan, Bangladesh, Bhutan, Cambodia, China, Hong Kong, India, Indonesia, Japan, Laos, Malaysia, Mongolia, Myanmar, Nepal, Pakistan, Philippines, Singapore, South Korea, Sri Lanka, Taiwan, Thailand, and Vietnam. The degree of social cohesion has been measured in two time periods: Wave 1 (2004-2008) and Wave 2 (2009-2015).

Carried out by a team of researchers from Jacobs University Bremen and Otto-von-Guericke Universität Magdeburg in Germany, the study belongs to the Social Cohesion Radar social reporting initiative of Bertelsmann Stiftung. It aims to provide the general public with a conceptually and methodologically sound overview of the levels and trends of cohesion as well as an in-depth understanding of its determinants and outcomes. Due to the theoretical and methodological rigor of the study, researchers of the topic can also benefit from this project.

The first half of this report offers our definition of cohesion, a brief overview of the data that we used, and an elaboration on the methods employed. The second half offers a technical, step-by-step 'tour' through the process of constructing scores for social cohesion and its dimensions. In addition, we offer technical appendices with relevant information for our measurements.

We publish this methods report, the codebook, and the dataset[1] to assist the readers of the volume *What Holds Asian Societies Together* and researchers of the topic in finding all information needed to understand the construction of the social cohesion index. We attempt to do our best to deliver this information in a transparent, useful, and easily accessible way.

[1] The codebook and the dataset are available online at www.social-cohesion.net.

2 Overview of Theory, Data, and Method

This section opens with a definition of cohesion and an elaboration on its dimensions to facilitate the further reading of the Methods Report. We then offer a brief description of the data and their sources, after which we delve into an introduction of the methods we have applied.

2.1 Social Cohesion

A screening study by Schiefer, van der Noll, Delhey, and Boehnke (Bertelsmann Stiftung, 2012; Schiefer & Van der Noll 2017) put together the scattered bits and pieces of knowledge on social cohesion to lay the foundation for a refined and theoretically sound conceptualization. We are furthermore highly indebted to the input of a group of experts gathered by Bertelsmann Stiftung, who helped our definition crystallize.

We define social cohesion as “the quality of social cooperation and togetherness of a collective, defined in geo-political terms, that is expressed in the attitudes and behaviors of its members” (Dragolov et al. 2016: 6). Social cohesion is a characteristic of the collective residing in this entity, rather than of individual members. A cohesive society can be characterized by reliable social relations, a positive emotional connectedness of its members to the entity, and a pronounced focus on the common good. Each of these three domains unfolds in three dimensions, which can be measured separately.

The domain ‘social relations’ encompasses the social networks of the members of the entity, the level of trust in others, and the degree of acceptance of diversity. The domain ‘connectedness’ comprises the strength of identification with the entity, the level of trust in institutions, and the per-ceived level of fairness. The third domain, ‘focus on the common good’ encompasses the level of solidarity, the extent to which people are willing to recognize social rules, and the degree of civic participation. Table 1 elaborates further on the dimensions. The numbers next to the dimensions serve in the later parts of the Methods Report as shortcuts to the dimensions.

By adopting this conceptual framework of social cohesion, we propose a universalistic approach that allows for the potential establishment of the Social Cohesion Radar as a globally applicable tool for monitoring the level of social cohesion across the world. At the same time, the framework allows us to adapt the measurement of the dimensions of cohesion to the particular socio-economic, political, and cultural specificities of the Asian context.

Table 1: Domains and dimensions of social cohesion

Domain	Dimension	Guideline
 **1. Social relations** create cohesion through a network of horizontal relationships between individuals and societal groups of all kinds, which is characterized by trust and allows for diversity.	1.1 Social networks	People have strong, resilient social networks.
	1.2 Trust in people	People have a high level of trust in others.
	1.3 Acceptance of diversity	People accept individuals with other values and lifestyles as equal members of society.
 **2. Connectedness** promotes cohesion through positive identifi cation with the country, a high level of confi dence in its institutions and a perception that social conditions are fair.	2.1 Identification	People feel strongly connected to their country and identify with it.
	2.2 Trust in institutions	People have a high level of confi dence in social and political institutions.
	2.3 Perception of fairness	People believe that society's goods are fairly distributed and that they are being treated fairly.
 **3. Focus on the common good** promotes cohesion through actions and attitudes that help the weak, are in keeping with society's rules and allow for a collaborative approach to the organization of society.	3.1 Solidarity and helpfulness	People feel responsibility for others and are willing to help them.
	3.2 Respect for social rules	People abide by the fundamental rules of society.
	3.3 Civic participation	People participate in society and political life and enter into public discussions.

BertelsmannStiftung

2.2 Data

In the following paragraphs, we give a concise overview of the data with respect to the studied countries and time periods.

2.2.1 Secondary Data Analysis

Our approach to measuring social cohesion relies exclusively on secondary data analysis. This method re-uses data that have already been gathered by the same or other researchers to answer similar or very different research questions (Smith, 2008). The use of secondary data is common

practice in the social sciences: for example, Smith shows that 75% of the contributions to three reputable British sociology journals rely on such sources.

The advantages of secondary data analysis for our study, in particular, outweigh the related disadvantages. Secondary data analysis allows us to measure the dimensions of social cohesion with valid and reliable indicators from representative large-scale international comparative surveys, expert ratings, or data from international institutions. This saves time and money: a primary data collection for 22 countries would undoubtedly have been too costly. Foremost, secondary data analysis is the only meaningful strategy considering the aim of the study to track the level of social cohesion in two time periods from 2004 to 2015. Otherwise, we would have had to rely on retrospective accounts of the kind “How was it over a decade ago?”.

A study using secondary data analysis has to deal with certain disadvantages stemming from the method which, however, do not outweigh its advantages. The most serious disadvantage is the scarcity of indicators that measure exactly what the study intends to measure. This issue becomes pronounced with a study like ours that attempts to scrutinize the level of social cohesion in a period of almost 12 years for countries with sometimes only irregular data collection. It is often the case that the usable data stem from different sources and are comparable only under certain conditions. In the sections to follow, we present evidence that our data and indicator selection meet the purposes of the study to the best possible extent.

Secondary data analysis presents further challenges related to data availability: missing informa-tion on indicators for particular countries at particular points in time, as well as limited availability of identical indicators across time.

Thanks to recent advances in the quantitative social science methods, we can employ statistical procedures–exploratory and confirmatory factor analysis–that allow us to use only that part of the variance of an indicator that is relevant for the measurement of a dimension of social cohesion. Furthermore, our methods toolbox offers a reliable algorithm for dealing with missing data: full-information maximum likelihood (FIML). To handle the issue with differing indicators across time for the measurement of the dimensions, we turn to so-called reflective measurement models.

Moreover, analyzing secondary data in an internationally comparative context raises the criticism that making use of comparative surveys conducted worldwide may fail to address cultural specificties and potentially introduce Western bias. These criticisms potentially apply to the World Values Survey as well as the Gallup World Poll. Thus, our study also included cross-national social surveys adapted to the Asian context(s), such as the AsiaBarometer and the Asian Barometer.

2.2.2 Sources

The study measures social cohesion and its dimensions using data from large-scale cross-sectional international comparative surveys, expert ratings and information from international insti-tutes. Below we list the data sources. Brief descriptions on the data sources can be found in Appendix A and a breakdown by data collection year, data collection method, survey language, and sample size for each country is provided in Tables 3 to 6 in Appendix A. Specific data preparation steps are presented in the Codebook accompanying the data set.

Surveys

1. Gallup World Poll
2. World Values Survey
3. Asian Barometer
4. AsiaBarometer

Expert Ratings and Institutional Data

5. Core Civil Society Index
6. Equality of Opportunity
7. Group Grievance
8. Homicide Rate
9. Political Participation
10. Government Restrictions Index Involving Religion
11. Social Hostilities Index Involving Religion
12. Shadow Economy
13. Voluntary Unpaid Blood Donations

2.2.3 Countries

The study reports on the level of social cohesion in 22 countries in South, Southeast, and East Asia. We define the SSEA region as encompassing all countries and autonomous territories between Afghanistan to the West and Japan to the East, as far as they are situated South of the former Soviet Union, and West of Papua New Guinea (which we classify as belonging to Oceania). This geographical area includes: Afghanistan, Bangladesh, Bhutan, Cambodia, China, Hong Kong, India, Indonesia, Japan, Laos, Malaysia, Mongolia, Myanmar, Nepal, Pakistan, Philippines, Singapore, South Korea, Sri Lanka, Taiwan, Thailand, Vietnam. Table 2 sorts the 22 analyzed countries according to their region of Asia.

Table 2: Countries included in the Asian Radar

South Asia	Southeast Asia	East Asia
Afghanistan (AF)	Indonesia (ID)	China (CN)
Bangladesh (BD)	Cambodia (KH)	Hong Kong (HK)
Bhutan (BT)	Laos (LA)	Japan (JP)
India (IN)	Malaysia (MY)	South Korea (KR)
Nepal (NP)	Myanmar (MM)	Mongolia (MN)
Pakistan (PK)	Philippines (PH)	Taiwan (TW)
Sri Lanka (LK)	Singapore (SG)	
	Thailand (TH)	
	Vietnam (VN)	

Notes: Abbreviated country names in parentheses.

2.2.4 Time Periods

The study measures social cohesion over 12 years, which we divided into two waves – Wave 1 (2004-2008) and Wave 2 (2009-2015) – with respect to important societal and political processes that took place. These periods, furthermore, correspond to those in the comparison of social cohesion in 34 Western societies (Dragolov et al. 2016). Data from the above listed sources were assigned to the respective waves on the basis of the year in which the data collection began. Table 8 of Appendix A provides an overview of the data coverage.

2.3 Method

The following section introduces the methods employed. To arrive at dimension scores for the set of countries we combine exploratory and confirmatory techniques in a structural equation modeling framework. Cohesion scores are calculated as the arithmetic mean of the nine dimensions in each wave.

2.3.1 Structural Equation Modeling

If the data were perfect, the analyses that the study undertakes to derive country scores for the dimensions of cohesion in both waves could be entirely done in an exploratory mode within a standard statistical software package. To deal more efficiently with missing information, we resorted to M*plus* (Muthen & Muthen, 1998-2011), a sophisticated statistical program, which offers –among other modes of estimation – FIML within its structural equation modeling (SEM) framework.

Typically, SEM assumes a confirmatory approach in testing whether a certain hypothesized model of relations among variables fits the data (Byrne, 2012). We need, however, an exploratory strategy (exploratory factor analysis) to select empirically sound measures for the nine dimensions among the ones available in the secondary data sources. Once the most appropriate sets of indi-cators for the dimensions have been selected on empirical grounds, it is necessary to extract the factor scores for each country on the dimensions as they give the relative country positions we are looking for. Standard statistical software packages such as SPSS are able to extract factor scores already within exploratory factor analysis, but they do not integrate FIML. At the same time, the M*plus* software offers this estimation algorithm, but allows factor score extraction only within its confirmatory factory analysis procedure. This is why we undertake a combined approach of explo-ratory and confirmatory techniques.

We proceed with a brief theoretical introduction of the methods.

Full-Information Maximum Likelihood

The analyses that lead to the calculation of the country scores on the nine dimensions of social cohesion profit from the application of a powerful parameter estimation method called maximum likelihood.

Maximum likelihood estimation attempts to derive parameter estimates that are most likely to produce the observed data (Enders, 2010). This is done in an iterative process during which the computer improves on the estimates it derived in a previous cycle of calculation. Typically, the sta-tistical software is programmed to make a good “guess” on the starting values for the initial solution, but the researcher can help the process of convergence to an admissible solution by giving reasonably accurate initial estimates of the model parameters (Kline, 2005).

The greatest advantage that the method of maximum likelihood estimation offers is its robustness in dealing with missing data. As mentioned in the previous section, our secondary data analytic approach faces the challenge of occasional unavailability of indicators for some countries across time. If missing data are present, the estimation procedure is called full-information maximum like-lihood (FIML). Full-information, as appended to the name, emphasizes that the estimation algorithm makes full use of the available information in the data rather than discard parts of it. Apart from this, the logic of the estimation remains the same.

In contrast to “traditional” – and by now outdated – techniques of handling missing data, such as ‘list-wise deletion’ (which can considerably reduce the number of available cases, whereas we deal with 22 countries at most only), ‘pairwise deletion’ (which may jeopardize the mathematical properties of the covariance matrix), or mean substitution (which reduces items’ variability), FIML estimation is considered to be the state-of-the-art missing data handling technique (Enders, 2010). Schafer and Graham (2002) show that FIML produces unbiased parameter estimates if the missing data mechanism is that of ‘missing at random’ (MAR). FIML is superior to traditional missing data handling techniques also when the data are ‘missing completely at random’ (MCAR). Even when they are ‘missing not at random’ (MNAR, the worst scenario), the bias in the parameter estimates remains isolated to only a subset of the estimates rather than to the entire model (Enders, 2010). As a side-note, we point to an article of Raykov (2011) on the testability of missing data mechan-isms. Besides a concise introduction to the three mechanisms, Raykov makes the point that there is no need for preoccupation with distinguishing between MNAR and MCAR, as MCAR is not testable, but one can rather increase the plausibility of MAR. Even if MAR is violated, the method of full-information maximum likelihood, particularly when auxiliary variables are used, is robust and yields results comparable to multiple imputation, a much more laborious missing data handling technique (Enders, 2010).

Reflective Measurement Model

Besides unavailability of data for particular countries within a wave, our study faces another challenge also stemming from secondary data. This is now the unavailability of identical indicators (e.g., survey items) across time for the measurement of a dimension. To overcome this issue we turn to reflective measurement models, which directly relate to factor analysis and are thus part of SEM where, as we already know, the default estimator is (full-information) maximum likelihood.

Figure 1 gives an example of a reflective measurement model in which a latent construct R1 is measured with observed indicators Y1 to Y4. To reduce the level of abstraction, imagine that we measure intelligence (R1) based on reading ability (Y1), writing ability (Y2), speaking ability (Y3), and mathematics (Y4).

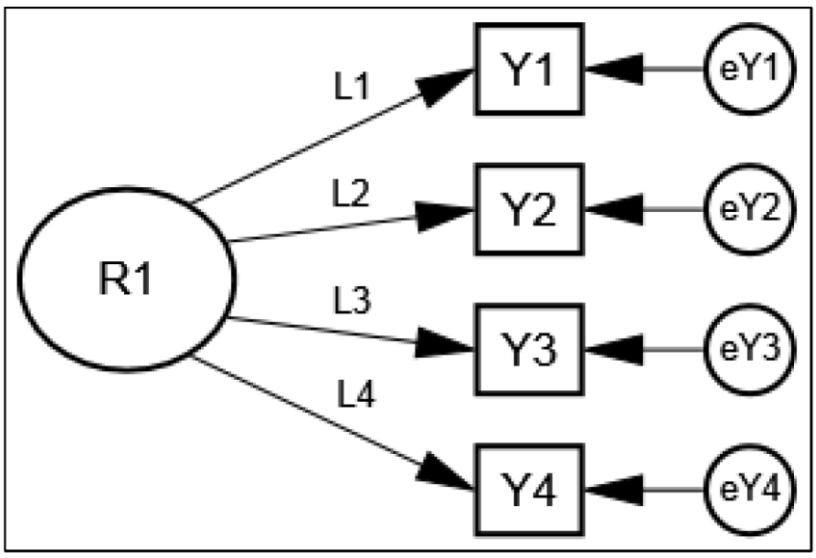

Figure 1: Reflective measurement model

The direction of the arrows L1 to L4 in Figure 1 clearly expresses the logic: the indicators depend on the latent variable, or in other words, the latent construct R1 determines the manifest indicators Y1 to Y4. To come back to our example, intelligence is the reason for the performance on the four tests. As long as the indicators belong to the "item universe" of a latent construct, they can be con-sidered interchangeable exemplary manifestations of the latent. Of course, removing an indicator may lead to a less reliable measurement of the latent, but this is safeguarded by the fact that only correlating indicators are part of the measurement of a latent construct. Due to the strong associa-tions among each other, these indicators tend to form a unidimensional construct, adding few heterogeneous facets to its measurement (Bollen & Lennox, 1991). Weakly to uncorrelated indicators cannot be part of a reflective measurement model.

Factor Analysis

Reflective measurement directly relates to factor analysis. Put in plain words, factors measure things that are not directly measurable, hence latent (Field, 2009). Measuring acceptance of di-versity in a country is different from measuring its annual temperature. We cannot use a thermometer or a ruler to study the degree to which people tolerate others who lead different lifestyles. Instead, we have to assume that acceptance of diversity is a factor, a latent construct, that underlies a pattern of ob-served attitudes towards various minority groups and is, thus, indirectly measurable through them.

An indication of the extent to which each of the observed indicators (Y1 to Y4 in Figure 1) contri-butes to the latent factor is given by their factor loadings (L1 to L4). These loadings quantify the strength and direction of association between the indicator and the factor. They can be seen as standardized regression coefficients which take values between -1 and 0 (e.g., a more negative attitude towards right-wing extremists stands for higher acceptance of diversity), or between 0 and 1 (e.g., a more positive attitude towards gays and lesbians stands for higher acceptance of diversity). According to a large-scale meta-analysis (Peterson, 2000), there is agreement in the published lit-erature that absolute factor loadings of 0.25 and above indicate that a particular observed indicator allows a sufficiently potent measurement of a latent. The amount of variation that is left unexplained by the latent is called 'uniqueness' in exploratory factor analysis or 'error term' in confirmatory factor analysis. These are displayed as eY1 to eY4 in Figure 1. They represent the part of variation in the indicators that does not "fit" to the measurement of the latent.

Finally, we introduce the concept of factor scores. Factor analysis is in itself a data reduction tech-nique that is able to summarize into a single score the observed values on the indicators for every case in the analysis. In our study, a factor score of a country represents its relative position on a dimension with respect to the other countries in the sample. Factor scores can theoretically vary between $-\infty$ (infinity) and $+\infty$, but in practice one often finds them in the range of ±3.

There are two types of factor analysis: exploratory and confirmatory. Exploratory factor analysis (EFA) is well-suited in situations where the associations between observed indicators and latent variables are unknown (Byrne, 2012). The analysis determines how many factors underlie the pat-tern of associations between the indicators and to what extent each of the indicators contributes to the factors.

We use EFA in M*plus* (Muthen & Muthen, 1998-2011) to reduce the number of selected items that we expect to measure a dimension at face validity. More precisely, we specify forced one-factor solutions, thereby always extracting the factor that most strongly explains the covariation of the in-dicators. Indicators that do not load above the threshold on this first factor are disregarded as they

tend to belong to other less prominent factors, which we assume not to be the dimensions we are looking for. The EFA procedure provides further evidence in support of the interchangeability of indicators across the four waves.

The second type of factor analysis – confirmatory factor analysis (CFA) – is typically used to "confirm" whether a hypothesized factor structure emerges on the basis of the available data. As mentioned, M*plus* (Muthen & Muthen, 1998-2011) is unable to extract factor scores already in the exploratory phase, which is the reason why we do this in a CFA procedure. These factor scores are essentially the scores of our 22 countries on every dimension in each wave. CFA offers, in addition, the possibility to modify the factor structure in a particular way. The extent to which the specified model fits the data can be assessed on the basis of the so-called goodness-of-fit indices. For our purposes, we fix the factor loadings of the pertinent items to those found in the final exploratory factor solution (see below). This strategy warrants that each item has the same contribution to the measurement of the respective dimension across time.

As the nature of the study is exploratory, we do not report goodness-of-fit measures. To provide an indication on the quality of the constructed dimensions, we instead resort to Cronbach's alpha coefficient of internal consistency, a commonly used measure for the validity of factor analysis (Manly, 2004). In the practice of psychometrics, a Cronbach's alpha of 0.80 to 0.90 is a desirable absolute threshold. Relative thresholds for Cronbach's alpha (which are more pertinent in the wider social sciences) take into account the length of a 'scale' (items measuring a latent variable), sug-gesting that an alpha of 0.10 times the number of its indicators is sufficient (Nunnally, 1967). We take the strategy proposed by Raykov (2008) to calculate Cronbach's alpha directly within a CFA in M*plus*.

Formative Measurement Model

After we have calculated dimension scores for each country in each wave, we are set to calculate the overall social cohesion scores. On theoretical grounds, we pose that social cohesion is a nine-dimension construct (see Table 1). We do not need to legitimate the operationalization on empirical grounds, as it is driven by our theoretical premises.

This stance is in line with the formative index-building approach, which is graphically depicted in Figure 2. The indicators X1 to X4 determine the latent variable F1 (Bollen & Lennox, 1991). They are its building blocks and each of them contributes a unique facet to its measurement. This is why formative indicators are not interchangeable. Moreover, they need not be correlated among each other as long as there is a sound theoretical basis to justify why they have been "packaged" together. For our study, we particularly refer to Bertelsmann Stiftung (2012) for an elaboration on the theory behind our approach to social cohesion.

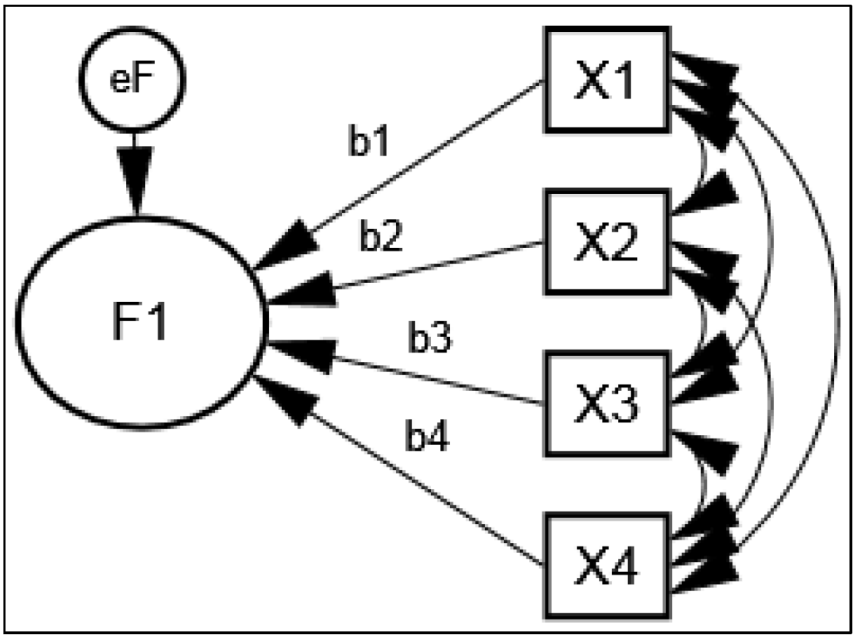

Figure 2: Formative measurement model

An example of an established social reporting initiative that takes, in principle, a similar road is the Human Development Index (UNDP, 2013).[2]

3 Methodological Steps

The current section of the Methods Report deals with the actual methodological steps undertaken and decisions made in preparation of the Social Cohesion Index. Figure 3 shows how the methodological steps in the process build upon each other.

In the following, an account is given of the guiding principles for indicator selection and data preparation techniques, such as aggregation and data transformations. After the compilation of the initial Macro Dataset, a thorough screening of the selected indicators is performed, so that the indicator-case ratio is within acceptable statistical boundaries. After a thorough screening of the available relevant indicators and a review of the contextual appropriateness of the indicators, there is a further reduction of the indicators, based on the results of exploratory factor analyses. As part of the EFA procedure, we test the correspondence of the indicators to a given dimension as well as their interchangeability across time. Based on the results of the EFA procedures, we estimate reflective measurement models for each dimension and wave, which yield the factor scores (dimension scores) for our countries. As a penultimate step of the process, we substitute missing values on the dimensions and standardize the newly extracted dimension scores, before entering them into the formative measurement model of social cohesion. In a final step, we calculate scores for social cohesion and its domains.

[2] For the HDI, however, a geometrical means approach is employed, while we resort to arithmetically averaging indicators.

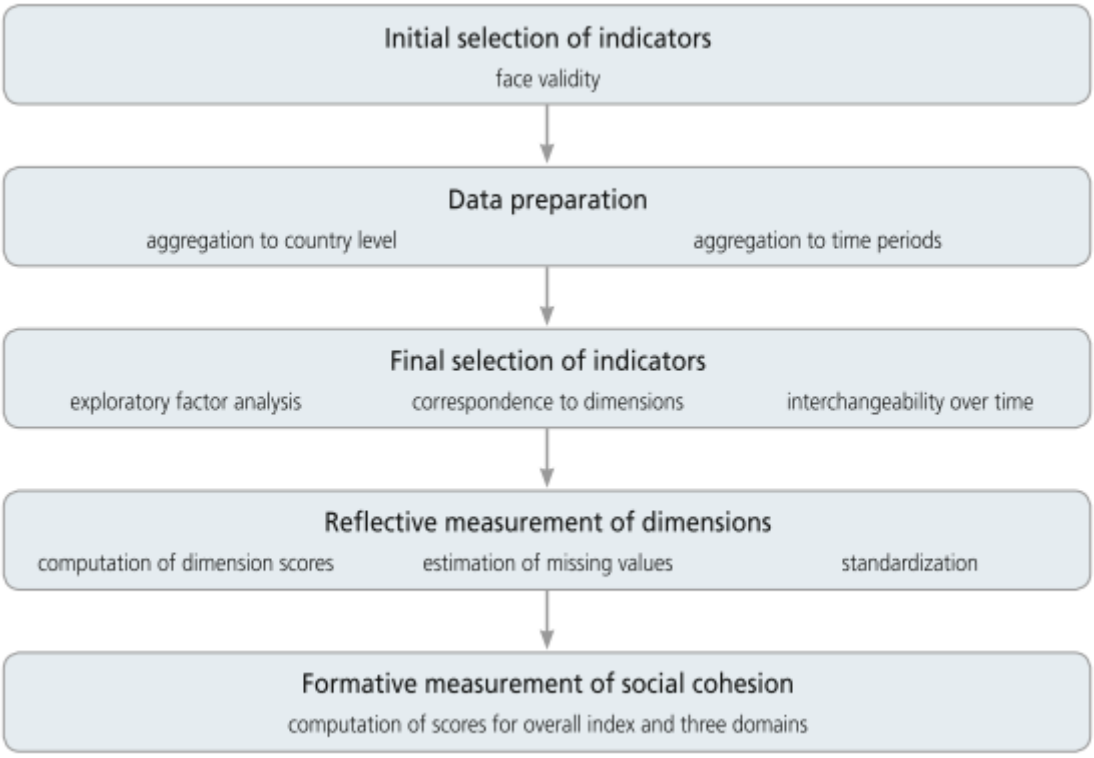

Figure 3: Overview of methodological steps

3.1 Indicator Selection

The initial selection of indicators entailed a two-step process related to considerations on their conceptual correspondence to the dimensions of social cohesion and their appropriateness in the SSEA context.

3.1.1 Face Validity

The indicator selection was driven by criteria defined in the research proposal: (1) the country coverage of the sources from which the indicators were taken should include most of the 22 SSEA countries, (2) the sources themselves should comply with international standards for cross-country comparability[3], and (3) indicators should correspond with the guiding principles for the dimensions of social cohesion.

The first two criteria were met by taking into consideration only such data sources that are internationally established and have a clear policy on cross-country comparability. Additionally, only such sources were considered, where it was clear that the scope of the countries covered included most of the 22 SSEA countries (for details, see Appendix A). The third criterion applies to the face validity of indicators. A measure is considered valid at face if there is consensus among the involved researchers that the operationalization of the measured phenomenon matches its conceptualization (Neuman, 2003). Typically, face validity is seen as a minimal criterion of research measures (Kidder, 1982).

[3] A further criterion was considered for public opinion surveys: they needed to have representative samples for the country populations.

Taking face validity as the basis for our indicator selection meant that the research group followed guiding principles that describe the nine dimensions of social cohesion. These principles are in line with the theoretical premises of the current study which combines insights from the screening study that preceded this research (Bertelsmann Stiftung, 2012; Schiefer & Van der Noll, 2017), as well as the suggestions of an expert group gathered by Bertelsmann Stiftung.

Following these guiding principles, the members of the research group collected a wide set of indicators for each dimension. The selection procedure entailed that any member of the research group could suggest an indicator for a given dimension if he or she judged it to be in line with the formulated guiding principle. The indicator was retained only if all other members of the research group — independently of each other — agreed on its face validity with respect to the given dimension. As a result of this process, we arrived at a large set of 75 survey items and 26 other items from expert ratings and institutional sources.

3.1.2 Contextual Appropriateness of Survey Indicators

Although the measurement of social cohesion aims to meet the highest academic standards of social science research, our study is not a value-neutral endeavor. This feature of the study finds its roots in the definition of social cohesion and, thus, our stake on it, which positions cohesion as a valuable and desirable characteristic of a collectivity of people. For example, the theoretical premise that acceptance of diversity be a core component of the degree of togetherness in society is an indispensable value judgment. Consequently, the choice of indicators does not remain value-neutral, either. Nevertheless, the present study aims to accommodate the cultural specificities of the SSEA context.

The contextual appropriateness of the preselected survey indicators was assessed via an online questionnaire to Asian experts in the countries of interest. The online survey functioned as an instrument for an ex post cognitive pre-testing of the survey indicators. Cognitive pre-testing, also known as cognitive interviewing, is a field research method mainly used in the developmental stage of survey instruments. Due to the Asian Radar's exclusive use of secondary data, insights on the relevance of the available survey indicators, particularly regarding their contextual fit in the SSEA region, could be gathered only *ex post*.

Thirty-seven experts in social survey methodology from almost every SSEA country were invited to participate[4]. The survey was fielded using the Unipark platform (www.unipark.de) and was accessible from September 4–30, 2015. The experts were first asked to identify their country of expertise and evaluate their familiarity with its social, political, and economic aspects. For each of the nine dimensions of cohesion, the experts were introduced to its definition and a list of available indicators. The experts were asked to pinpoint the indicators they deemed relevant to the measurement of the respective dimension in their country of expertise. If some indicators remained, the experts were offered the chance to select those that they deemed completely irrelevant and to give an explanation for their choice.

Fifteen experts participated, representing 11 countries: Cambodia (1 expert), China (4), Hong Kong (1), India (2), Malaysia (1), Mongolia (1), Myanmar (1), Nepal (1), Pakistan (1), Sri Lanka (1), and Vietnam (1). The results revealed that certain items that have been utilized in previous Social Cohesion Radar studies may be problematic in the Asian context, especially items regarding

[4] Experts were solicited after consultation with a member of the WVS Steering Committee, Professor Chris Welzel, Leuphana University Lüneburg, Germany, and with the head of Gallup Asia, Bangkok, Ms. Nicole Naurath.

homosexuality ("acceptance of diversity"); trust in the police, the courts, and the government ("trust in institutions"); and participation in political activities such as boycotts or demonstrations ("civic participation"). These findings did not result in an immediate dismissal of indicators, but rather informed the empirical screening process as described below.

3.2 Data Preparation

Before proceeding to the screening techniques, we compiled an initial Macro Dataset that pools the selected indicators together. Keeping in mind that social cohesion is a characteristic of societies rather than of individuals, readers should note that the Macro Dataset is a country-level dataset, with cases being the countries of interest. Typically, however, some indicators were available on the individual level, while some indicators were only available (and only carried meaning) on the country level. Therefore, first, all individual-level data were cleaned, recoded on the individual level, and then aggregated to the country level.

Cleaning of Individual-Level Data. All indicators were treated for missing values. This involved a deletion of missings on an item per item basis. Although all survey data stem from samples representative of the country populations, this procedure could potentially entail a methodological problem, if missingness did not occur at random (e.g., due to social desirability bias or non-response to sensitive personal questions, which we cannot account for).

Recoding of Individual-Level Data. Once the missing values had been treated, a recoding of the indicators was undertaken. Recoding was necessary for a meaningful aggregation of the individual level data and for a better interpretation of the factor analysis output in later steps. In the course of recoding, several attributes of the indicators were taken into consideration: the level of measurement, the distribution of answers across the answering options, and the correspondence of the values to the meaning of the answering options. If an indicator was of ordinal measurement quality and had at least four categories, it was considered continuous. If an ordinal indicator had only three categories or if an indicator was nominal, then it was dichotomized with respect to the most relevant category. If an indicator originally had a reversed scale for a question or statement with a positive wording, we recoded the scale, so that a higher value stands for a higher agreement with the statement or question posed.

Aggregation of Individual-Level Data. Once the indicators were treated for missings and re-coded in the manner explained above, the aggregation of individual-level data to the country level was performed by taking the country average (arithmetic mean) of the respective indicators.[5]

Aggregation from Years to Waves (Country Level). Initially, once all indicators were expressed on the country level, they stored information about countries on a yearly basis. Since the time of the fieldwork in the different countries could differ, the year the data point was associated with was the year the fieldwork began in a given country. Aggregating observation years to waves is justified by the fact that social cohesion is a societal-level phenomenon and as such, drastic changes in social cohesion from one year to the next are hardly expected. Additionally, data availability for the set of

[5] Over the course of previous Social Cohesion Radar studies, other measures, such as median or standard deviation were considered appropriate to represent a country for a given indicator. However, from a conceptual point of view and for comparability and consistency reasons, we opted for the use of means. Distributional measures other than means (measures of dispersion, in particular) often tend to have vastly different mathematical properties than arithmetic means, a fact that would have greatly complicated reflective index building.

studied countries on a yearly basis is limited. Therefore, we identified two waves with re-spect to the timing of socio-historical processes that took place in our set of countries. If data on a particular indicator exist for multiple years within a wave, we took the average of the data points available for that given indicator. Last, the data were standardized applying regular *z*-standardization and stored in the so-called wide format, where each row uniquely represents a country, whereas the columns contain data on the indicators for each wave.

Given the wide format, from now on the term “indicator” refers to an item-wave constellation. For example, d11_cntct_anb_w1 and d11_cntct_anb_w2 store data on an item “cntct” from the Asian Barometer (AnB) for Waves 1 and 2, respectively. The prefix d11 further shows that this item belongs to Dimension 1.1, Social Relations. In contrast, the term "unique indicator" refers to — in the current example — d11_cntct_anb, thereby signifying that this item for Dimension 1.1 can be found only in the Asian Barometer. For more details on data coverage and the exact transformations of the indicators that entered the construction of the social cohesion indices, please refer to the Codebook.

3.3 Construction of Dimensions

Once the preparation of the data is complete, the next steps involve narrowing down the selection of items, assessing whether the selected items indeed belong to the dimensions of interest, and testing whether there is continuity in the meaning of the dimensions over time. These steps were achieved by the use of various tools, which are elaborated in the following sections of the Methods Report.

3.3.1 Indicator Screening (Reduction of Indicators)

The initial dataset that we compiled after the indicator selection consisted of a wide choice of items. With only 22 countries to be analysed, the number of indicators available per dimension per wave was often two to three times higher than what would have been statistically appropriate – based on the rule of thumb of Cattell (1966), the number of variables should not be more than a third of the number of cases. In order to obtain methodologically sound results, the number of indicators had to be reduced to a manageable set that could then be used to estimate the dimensions of social cohesion.

We developed a set of criteria to select the most viable indicators for estimating the dimensions of social cohesion; viable in the sense that the indicators are reliable measures for the dimensions they are associated with, but also ensure relatively good data coverage; and are available for more than one wave. Hence, the following criteria were considered simultaneously:

1. Country Coverage
2. Continuity
3. Contextual Appropriateness

Country Coverage. The criterion ensures that the indicators have extensive country coverage, so that the estimation of the scores makes use of the most information available. Even though FIML methods help deal with incomplete data coverage, there are certain thresholds beyond which the analyses yield inadmissible solutions. In M*plus*, the so-called covariance coverage should not be lower than 0.10. As a general principle, we disregarded indicators that cover less than 11 countries (approximately one-half of our sample size).

Continuity. Another aspect to consider was the comparability of a certain dimension over the two periods. While we applied sophisticated statistical techniques to test the comparability of dimensions across waves in the later stages of the analysis (see Pantemporal EFA), this criterion helped us ground and pave the way for a successful start. Such a criterion was only developed once it was clear that the selected data were rich enough to allow dispensing with those items that were not repeated over two waves.

Contextual Appropriateness. As detailed in Section 3.1.2, a further consideration for the inclusion of an indicator in the measurement of a dimension refered to its contextual appropriateness in the various Asian contexts. This was determined using ex post cognitive pre-testing of the survey indicators. While suggested misfit did not result in an immediate dismissal of the indicator, it did contribute an additional piece of information in the process of empirical screening.

3.3.2 Further Reduction of Indicators (Exploratory Factor Analysis)

The screening process described above yields optimal data coverage which allows us to proceed to the construction of the dimensions of social cohesion. The further steps include, first, an explora-tory factor analysis (EFA) per dimension per wave, followed by a 'pantemporal' exploratory factor analysis for each dimension. The theoretical considerations behind these methodological steps stem from the assumption that the dimensions are latent variables, which are only measurable through their manifestations in observed indicators. These manifest indicators are the ones that we selected and screened previously. Both EFA procedures serve us to further curb the selection of items and help us make sure that the indicators used to construct the dimension scores truly reflect a given dimension of social cohesion, also across the two waves.

EFA per Dimension per Wave. Before the EFA, the indicators were attributed to the respective dimensions, based on their subjectively judged face validity. However, the EFA allows us to review and validate our initial decisions as guided by face validity considerations and dispose of any indicators that are in fact unrelated to a given dimension. In order to assess whether the selected indicators belong to the assumed latent constructs, several EFAs were conducted. The factor load-ings produced by the EFAs were taken as a criterion for the decision as to which indicators to retain. In all EFAs per dimension per wave, the following criterion was used:

> The absolute value of the (standardized) factor loadings of each indicator needed to be equal to or larger than 0.25.

We further took into consideration that the final factor solution should not have more than seven indicators per dimension per wave, a limitation stemming from the small number of analyzed countries.

Once the factor structures were established for each of the dimensions and waves, the next step was to ensure that the indicators were interchangeable across time. In order to do so, a so-called pantemporal EFA was conducted.

Pantemporal EFA. The aim of the pantemporal EFA is to ensure that the indicators used in the two waves of a given dimension correspond with one another or, in other words, they are interchangeable. This step also ensures the correspondence with the general dimension of per-wave-per-dimension models. Our approach to testing the interchangeability of the indicators across the waves of a dimension is challenged by the fact that we have all-in-all 22 countries (cases) for two waves

(2x7 indicators possible). This is why we opted for reshaping the original wide format of the data set to a long one, the latter being typical for multi-level designs. Following such a strategy, we essentially collapsed the item-wave indicator constellations to unique ones. Disregarding the multi-level structure of the data (countries at Level 2, waves at Level 1), we arrived at a pooled dataset with 44 cases (2x22). The pooled dataset is the basis of an exploratory factor analysis for each dimension in both waves. Thereby we test whether all the unique indicators that were retained in the per-dimension-per-wave EFAs fit the pantemporal latent construct. The interpretation is similar to that of the previous EFA: it tells us whether each of the unique indicators represents a pantemporal version of the dimension in question. Again, only those variables were retained which met our criteria. Also here, the variables were retained if the absolute value of the respective (standardized) factor loading was equal to or larger than 0.25.

After these procedures, 27 survey items and nine expert ratings or institutional items remained, so that each dimension was measured using anywhere from three to seven indicators.

3.3.3 Extraction of Dimension Scores (Confirmatory Factor Analysis)

The concluding step to arrive at the final dimension structures is to switch to the framework of confirmatory factor analysis (CFA). The main aim of this methodological step is to fit uni-factorial structures on our data, based on the EFAs conducted previously. The framework was used solely as a tool to extract dimension scores for the calculation of the cohesion index.

In principle, the fitting of the dimensions was straightforward, as the prior procedures ensured that the dataset at this point was cleaned of indicators that did not sufficiently belong to the dimensions. We, thus, inserted the remaining indicators for each dimension-wave constellation into a confirmatory factor analysis. Here the factor loadings in both waves were held constant at their respective values from the pantemporal EFAs in order to ensure a consistent measurement of each dimension and over time, thereby limiting the potential sources of noise (e.g., random fluctuation) in the results. Corresponding with our previous practice, the absolute value of the (standardized) factor loadings for each indicator needed to be equal to or larger than 0.25.

Table 8 to Table 10 of Appendix B present the final factor solutions for each dimension and wave. Beside factor loadings, we present Cronbach‘s alpha coefficients. In all instances, the alpha coefficients suggest a sufficiently reliable measurement.

In addition, we repeated the pantemporal EFA with the final selection of items as a CFA. Relevant output is available in Table 11 to Table 13 of Appendix B. Again, we present Cronbach’s alpha coefficients for each “pantemporal” dimension. In all instances, Cronbach’s alpha suggests sufficiently reliable measurement.

3.3.4 Completion of Dimension Scores

Due to missing information on some indicators, that is, some countries not having been covered with any data for a given dimension in a given wave, not all countries receive factor scores, that is, scores on the dimensions.

Again relying on FIML and with an application of an effective workaround suggested in the lite-rature (Enders, 2010), we are able to close these gaps. Missing dimension scores in a wave are estimated on the basis of available dimension scores from other waves. Indeed, this sounds as if we predict

the weather for yesterday on the basis of today's conditions. However, we consider this procedure more reliable than any other alternative involving mere copy and pasting of data from the other wave. We, of course, clearly mark any estimated dimension score in the presented results.

Within a dimension, we recast the extracted scores from both waves as sole manifest indicators of latent variables. This can be seen as if we treated the manifest indicators as outcomes, while at the same time their exogenous status in the model is preserved. Factor loadings are constrained to 1, which transfers the metric of the observed variable to the latent one, whereas the residual va-riances are constrained to zero, which transfers the variance of the observed variable to the latent one (Enders, 2010; see Figure 4). Since each latent variable predicts the observed and all possible cor-relations between the two latent variables are explicated, any missing data point on the ob-served variables is estimated for the latent ones on the basis of the correlation among the two waves. It is important to note that the recasting from the manifest to the latent level does not change the model: it still remains a fully saturated one.

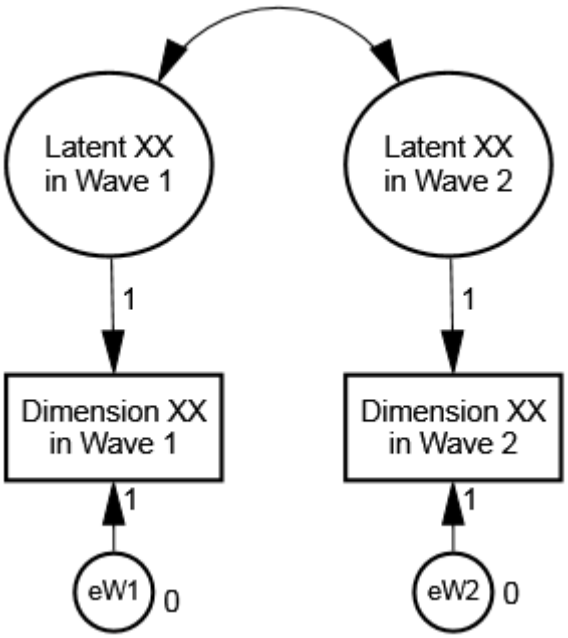

Figure 4: Estimating missing dimension scores

The factor scores on the latent variables were then saved. The values in each dimension and wave came out with a mean of zero but with different standard deviations. The 22 values for each di-mension and wave were then standardized (essentially by dividing each value through the standard deviation) to reach final dimension scores with a standard deviation of 1 and a mean of 0 (which they already had). This ensures a good relative comparison of values across waves and across dimen-sions. These are the final variables that represent the dimensions of cohesion as they are named in the dataset:

- d11w1, d12w1, d13w1, d21w1,d22w1,d22w1,d23w1, d31w1, d32w1, d33w1
- d11w2, d12w2, d13w2, d21w2, d22w2, d22w2, d23w2, d31w2, d32w2, d33w2.

From these values we construct all further measurements, rankings, descriptions, and visualizations in the report.

We show the values for all countries in Wave 2 (2009-2015) in Table 14, and for Wave 1 (2004-2008) in Table 15 of Appendix B. The tables report the same five colored groups as in the book.

3.4 Construction of the Cohesion Scores

Based on the formative measurement model, the cohesion scores were calculated as the arithmetic mean of the nine dimension scores. In the same way, domain scores were computed by averaging the three dimensions within the respective domain.

The variables in the dataset containing the overall cohesion and domain scores of the countries are the following:

- cohesion_w1, d1w1, d2w1, d3w1
- cohesion_w2, d1w2, d2w2, d3w2.

The cohesion scores are shown for all countries in Wave 2 (2009-2015) in Table 15, and for Wave 1 (2004-2008) in Table 16 of Appendix B. The ranking of countries is based on the cohesion scores.

Country scores on the overall index of social cohesion were not standardized. Therefore, their standard deviation is less than one. If all dimension values where uncorrelated and normally distributed, the standard deviation of the average over these nine variables would be mathematically:

$$\sqrt{1/N} = \sqrt{1/9} = 0.33.$$

Empirically, the standard deviations of the cohesion index are 0.43 (Wave 1) and 0.41 (Wave 2). The fact that the standard deviations of cohesion scores are larger than 0.33, emphasizes that dimensions are at least to a certain degree inter-correlated.

3.5 Presentation of Scores in the Report

To avoid an over-interpretation of numerical differences and ranking positions, we decided to allocate the countries into five groups based on their scores: the top group, the upper midfield, the mid group, the lower midfield, and the bottom group. To ensure relative comparisons across waves and dimensions, we always used the uniform boundaries -0.84, -0.25, 0.25, 0.84 between the groups. The rationale for these thresholds is that these groups would be equally large with 20% of the countries in each, if the values were normally distributed with a mean of 0 and a standard deviation of 1.

Based on this assumption, we should expect 4-5 countries in each group. As our dimension scores have a mean of 0 and standard deviation of 1, the only reason why group sizes differ from this is random fluctuation due to low sample size and non-normality of the distribution.

In order to provide a meaningful comparison to the dimension scores, country scores on the social cohesion index were categorized upon the same thresholds, although the index has a standard deviation lower than one.

4 Resumé

This methodological report aimed to provide readers of *What Holds Asian Society's Together?* with a detailed and transparent elaboration on the procedure for computing the overall index of social cohesion as published in the book.

We, as authors of the main chapters of *What Holds Asian Societies Together?* and of its Methods Report, are aware that soundly applying a new internationally valid social indicator is not enough. We need to show that it is worthy of forming the basis for a better understanding of the social reality, and of subsequently serving as a tool to improve the social cohesion of geopolitical entities.

The Asian Radar was able to demonstrate that a concept of social cohesion developed in a Western context can also be applied to the SSEA region while being sensitive to the socioeconomic, political, and cultural diversity across the region. Drawing on the approach of latent conceptual equivalence (Boehnke et al., 2014) allows for a cross-country measurement of a single construct of social cohesion while using indicators relevant to the particular context under investigation. Future research could take two possible directions. First, the Social Cohesion Radar could continue to be applied to new geographic regions in order to shed light on levels of social cohesion throughout the world, using available data. Second, instead of geographically focused measurements of social cohesion, creating a truly global Social Cohesion Radar based on primary data may offer broader insights into the causes and effects of cohesive societies.

5 References

Bertelsmann Stiftung (2012). *Cohesion Radar: Measuring Cohesiveness. Social Cohesion in Germany: A Preliminary Review* (Authors: David Schiefer, Jolanda van der Noll, Jan Delhey, and Klaus Boehnke). Gütersloh: Bertelsmann Stiftung.

Bertelsmann Stiftung. (2016). *Transformation Index BTI 2016. Political management in international comparison*. Gütersloh: Bertelsmann Stiftung.

Bertelsmann Stiftung (Ed.) (2017). *What Holds Asian Societies Together? Insights from the Social Cohesion Radar*. Gütersloh: Verlag Bertelsmann.

Boehnke, K., Arnaut, C., Bremer, T., Chinyemba, R., Kiewitt, Y., Koudadjey, A., Mwangase, R., & Neubert, L. (2014). Toward emically informed cross-cultural comparisons: A suggestion. *Journal of Cross-Cultural Psychology, 45*(10), 1655–1670.

Bollen, K., & Lennox, R. (1991). Conventional wisdom on measurement: A structural equation perspective. *Psychological Bulletin, 110*(2), 305-314.

Byrne, B. M. (2012). *Structural Equation Modeling with Mplus: Basic Concepts, Applications, and Programming*. New York: Routledge.

Catell, R. B. (1966). *Handbook of Multivariate Experimental Psychology*. New York: Rnad McNally.

Coppedge, M., Gerring, J., Lindberg, S. I., Skaaning, S., & Teorell, J. (2015). *V-Dem Codebook v5*. Gothenburg/Notre Dame: Varieties of Democracy (V-Dem) Project.

Enders, C. K. (2010). *Applied Missing Data Analysis*. New York: The Guilford Press.

FFP. (2016). *Fragile States Index* [Data file]. Washington, DC: Author.

Field, A. P. (2009). *Discovering Statistics Using SPSS: (and sex drugs and rock 'n roll)*. London: Thousand Oaks.

GWP. (2015). *Gallup World Poll* [Data file]. Washington, DC: The Gallup Organization.

Inoguchi, T. (2003). *AsiaBarometer Survey Data 2003* [Data file]. Retrieved from www.asiabarometer.org/data/abdl.php.

Inoguchi, T. (2004). *AsiaBarometer Survey Data 2004* [Data file]. Retrieved from www.asiabarometer.org/data/abdl.php.

Inoguchi, T. (2005). *AsiaBarometer Survey Data 2005* [Data file]. Retrieved from www.asiabarometer.org/data/abdl.php.

Inoguchi, T. (2006). *AsiaBarometer Survey Data 2006* [Data file]. Retrieved from www.asiabarometer.org/data/abdl.php.

Inoguchi, T. (2007). *AsiaBarometer Survey Data 2007* [Data file]. Retrieved from www.asiabarometer.org/data/abdl.php.

Kidder, L. (1982). Face validity from multiple perspectives. In D. Brinberg, & L. Kidder (Eds.), *New Directions for Social and Behavioural Sciences: Forms of Validity in Research* (pp. 41-57). San Francisco: Jossey-Bass.

Kline, R. B. (2005). *Principle and Practice of Structural Equation Modeling*. New York: Guilford Press.

Manly, B. (2004). *Multivariate Statistical Methods: A Primer*. Chapman and Hall/CRC Press.

Muthen, L. K. & Muthen, B. O. (1998-2011). *Mplus User's Guide. Sixth Edition*. Los Angeles: Muthen & Muthen.

National Taiwan University. (2003). *Asian Barometer Survey (ABS) Wave 1* [Data file]. Retrieved from www.asianbarometer.org.

National Taiwan University. (2008). *Asian Barometer Survey (ABS) Wave 2* [Data file]. Retrieved from www.asianbarometer.org.

National Taiwan University. (2012). *Asian Barometer Survey (ABS) Wave 3* [Data file]. Retrieved from www.asianbarometer.org.

Neuman, W. L. (2003). *Social Research Methods: Qualitative and Quantiative Approaches*. Boston: Allyn and Bacon.

Pew Research Center. (2015). *Latest trends in religious restrictions and hostilities*. Washington, DC: Author.

Raykov, T. (2008). "Alpha if item deleted": A note on criterion validitiy loss in scale revisionif maximizing coefficient alpha. *British Journal of Mathematical and Statistical Psychology, 61*, 275-285.

Raykov, T. (2011). On testability of missing data mechanisms in incomplete data sets. *Structural Equation Modeling, 18*, 419-430.

Schafer, J. L. & Graham, J. W. (2002). Missing data: Our view of the state of the art. *Psychological Methods, 7*, 147-177.

Schiefer, D. & Van der Noll, J. (2017). The essentials of social cohesion: A literature review. *Social Indicators Research, 132*(2), 579-603.

Schneider, F., Buehn, A., & Montenegro, C.E. (2010). New estimates for the shadow economies all over the world. *International Economic Journal, 24*(4), 443–461.

Smith, E. (2008). *Using Secondary Data in Educational and Social Research*. Maidenhead: McGra-Hill Education.

UNDP (2013). *Human Development Report: International Human Development Indicators*. New York: United Nations Development Programme.

UNODC. (2013). *Global Study on Homicide 2013*. Vienna, Austria: Author.

Vanhanen, T. (2014). *Measures of Democracy 1810–2012* [Data file]. FSD1289, version 6.0 (2014-01-31). Retrieved from urn.fi/urn:nbn:fi:fsd:T-FSD1289.

WHO. (2008). *Global Database on Blood Safety: Summary report 2008*. Retrieved from www.who.int/blood-safety/global_database/GDBS_Summary_Report_2008.pdf?ua=1.

WHO. (2009). *Global Database on Blood Safety: Summary report 2009*. Retrieved from www.who.int/blood-safety/global_database/GDBS_Summary_Report_2009.pdf?ua=1.

WHO. (2011). *Global Database on Blood Safety: Summary report 2011*. Retrieved from www.who.int/blood-safety/global_database/GDBS_Summary_Report_2011.pdf?ua=1.

WVS. (2015). *World Value Survey 1981–2014 Official Aggregate v.20150418* [Data file]. World Values Survey Association. Retrieved from www.worldvaluessurvey.org/WVSContents.jsp.

6 Appendices

6.1 Appendix A: Data sources, data collection, and coverage

Surveys

1. **Gallup World Poll (GWP; source: GWP, 2015)**

The Gallup World Poll has been conducted on an annual basis since 2005 by the Gallup Organization, an internationally prominent market and opinion research institute. More than 150 countries are surveyed on various topics related to attitudes, behaviors, and wellbeing, using randomly selected, nationally representative samples of approximately 1,000 residents per country. Telephone surveys are conducted in countries where at least 80% of the population has a telephone; where this is not the case, data are collected in face-to-face interviews. Telephone interviews take approximately half an hour, while face-to-face interviews last one hour. In the period from 2006 to 2014, the GWP delivers annual (or more frequent) data for between 16 and 20 SSEA countries (GWP, 2015). No other survey offers such comprehensive coverage of the region.

It is also important to note that in some countries, disproportionately high numbers of interviews occurred in urban areas, meaning that rural populations may not be adequately represented in the survey results (e.g, Bangladesh, China, India, Indonesia, Laos, Malaysia, Pakistan, the Philippines, Sri Lanka, Thailand, and Vietnam). Additionally, in some of the countries surveyed by the GWP, certain populations or regions were excluded for practical reasons, such as language issues, violent conflict, or recent natural disasters (e.g., China, India, Japan, Laos, Myanmar, Pakistan, Singapore, and Sri Lanka). This, of course, should be taken into consideration when interpreting the results from these countries.

2. **World Values Survey (WVS; source: WVS, 2015)**

Led by a worldwide team of social scientists, the World Values Survey examines values and their influence on the social and political aspects of life. The WVS conducts nationally representative surveys that take place in face-to-face interviews in nearly 100 countries, with at least 1,000 residents per country. The surveys are continuous, with identical questions across time periods. The WVS began data collection in the early 1980s, but the first wave only covered Japan and South Korea in the SSEA region (WVS, 2015). The second wave (1990 to 1994) additionally covered China and India. With the following two waves (1995 to 1998 and 1999 to 2004), eight to ten countries in the SSEA region were covered. The fifth (2005 to 2009) and sixth (2010 to 2014) waves included ten to eleven SSEA countries. Thus, for the Asian Radar, the WVS serves as a complement to the GWP data.

As with the GWP, certain populations and regions could not be best represented in the samples collected by the WVS (e.g, China, Hong Kong, India, South Korea).

3. **Asian Barometer (AnB; source: National Taiwan University, 2003; 2008; 2012)**

The Asian Barometer was developed to generate scientifically reliable and comparable data on social, political, and economic issues in the Asian context. The surveys use a standardized questionnaire with a core module of identical or functionally identical questions, asked in face-to-face interviews of approximately 1,200 respondents in each country. At the time the Asian Radar

was carried out, the AnB offered three waves of data. The first (2001 to 2003) covers eight SSEA countries, the second (2005 to 2008) covers 18 countries, and the third (2010 to 2012) covers 13 countries (National Taiwan University, 2003; 2008; 2012).

For the AnB, the Tibetan Autonomous Region was excluded from the surveys of China, non-Chinese-speaking populations were excluded from the surveys of Hong Kong, and the island of Jeju (1.2% of the population) was excluded from the surveys of South Korea.

4. **AsiaBarometer (AB; source: Inoguchi, 2003; 2004; 2005; 2006; 2007)**

The AsiaBarometer is an annual social survey conducted from 2003 to 2007 throughout SSEA and Central Asia, focusing on demographic, economic, and social issues. Except for Japan in 2003, the AB surveys were conducted face-to-face with anywhere from 800 to 1,000 respondents per country. In 2003, 10 countries were included in the survey, followed by 13 in 2004, 14 in 2004, and seven countries each year from 2005 to 2007 (Inoguchi, 2003; 2004; 2005; 2006; 2007).

Similarly to the underrepresentation of rural populations in GWP, several countries surveyed for the AB had disproportionately high numbers of interviews in urban areas (e.g., China, India, Myanmar, Nepal, Sri Lanka, and Vietnam). Moreover, Jeju Province in South Korea and the eastern mountainous regions of Hualien and Taitung Hsien in Taiwan were excluded from their respective national surveys.

Expert Ratings and Institutional Data

5. **Core Civil Society Index (CCSI; source: Coppedge et al., 2015)**

The Core Civil Society Index is part of the Varieties of Democracy (V-Dem) project, which produces annual scores in 173 countries based on internal and external expert ratings (Coppedge et al. 2015). Civil society organizations are understood to span the space between the private sphere and the state, for instance, as labor unions, social movements, or non-governmental organizations. Thus, the index is intended to measure how autonomous civil society is from the state and the degree to which citizens can freely strive for political and civic goals. Annual data are available from 2004 to 2012 for all countries or autonomous regions[6] in the Asian Radar, with the exception of Hong Kong and Singapore.

6. **Equality of Opportunity (EO; source: Bertelsmann Stiftung, 2016)**

Equality of Opportunity is an indicator used in the Bertelsmann Transformation Index (Bertelsmann Stiftung, 2016), which examines the state of political and economic transformation in 129 developing and transition countries. The scores on this indicator are based on expert assessments of equal access to social participation (e.g., education, public office, employment) regardless of social background, particularly for women but also for ethnic and religious groups. Scores range from 1 to 10, where 1 indicates that equality of opportunity is denied, and 10 indicates that equality of opportunity is achieved. Biennial EO scores are available for most countries of interest for the Asian Radar from 2006 to 2015, with the exception of Brunei, Hong Kong, Japan, Macao, the Maldives, and Timor-Leste.

[6] We treat Hong Kong, Macao, and Taiwan as autonomous units. In the following, the term “country” will always include these three geopolitical entities.

7. **Group Grievance (GG; source: FFP, 2016)**

The Fund for Peace (FFP) releases its Fragile States Index (FSI) annually for 178 nations (FFP, 2016). Through the triangulation of content analysis of documents, quantitative analysis, and qualitative inputs, scores are calculated for each country based on 12 key political, social, and economic indicators. Among them is the Group Grievance indicator, examining tensions and violence between groups using measures of discrimination, powerlessness, ethnic violence, communal violence, sectarian violence, and religious violence. Annual data are available for most Asian Radar's countries of interest, with the exception of Hong Kong, Macao, and Taiwan.

8. **Homicide Rate (HR; source: UNODC, 2013)**

The indicator Homicide Rate is based on data from the Global Study on Homicide conducted by the United Nations Office on Drugs and Crime (UNODC, 2013). Homicide rates are measured per 100,000 population. A homicide is defined as an unlawful death intentionally inflicted by another person. Data are gathered primarily from the UNODC's Survey of Crime Trends and Operations of Criminal Justice Systems (UN-CTS) and from databases managed by the World Health Organization (WHO) on causes of death. Annual data are available for all countries of interest for the Asian Radar.

9. **Political Participation (PP; source: Vanhanen, 2014)**

Political Participation from Vanhanen's (2014) Measures of Democracy is used to examine voting turnout, calculated as the percentage of the population that voted in elections. This measure also takes referenda into account: National referenda raise the variable value by 5% and state (regional) referenda by 1% for the year they are held. For the Asian Radar's countries of interest, annual data are available from 2004 to 2012, with the exceptions of Hong Kong and Macao.

10. **Government Restrictions Index (GRI) and Social Hostilities Index (SHI) Involving Religion (source: Pew Research Center, 2015)**

The Pew Research Center established a baseline of global restrictions on religion in 2007 and conducted follow-ups in 2012 and 2013, ranking 198 countries relative to one another based on data from more than a dozen international sources (Pew Research Center, 2015). The Government Restrictions Index is a ten-point index that takes into account 20 indicators of national and local governmental restrictions on religion through intimidation and force. The Social Hostilities Index, also a ten-point index, makes use of 13 indicators of the infringement upon religious beliefs and practices by private individuals (e.g., religious hate crimes, mob violence). Data are available for all countries of interest except for North Korea.

11. **Shadow Economy (SE; source: Buehn and Montenegro, 2010)**

Schneider, Buehn and Montenegro (2010) assess the size of countries' informal economies by capturing indicators related to tax burdens and compliance, unemployment, and freedom to pursue entrepreneurial interests. With the exception of Afghanistan, North Korea, and Timor-Leste, this measure offers annual data up to 2007 for the other countries of interest.

12. **Voluntary Unpaid Blood Donations (VUBD; source: WHO, 2008; 2009; 2011)**

The objective of the WHO's Global Database on Blood Safety (GDBS) is to inform the improvement of blood transfusion services across the world (WHO, 2008; 2009; 2011). Data are collected through a standardized tool sent to national health authorities, as well as through on-site visits to Ministries of Health and blood transfusion services. WHO aims to have all countries obtain their blood supplies from voluntary unpaid blood donations by 2020, thus this indicator measures the percentage of the donations that are voluntary and unpaid. For the purpose of this study, countries are ranked in four

categories (i.e., less than 25%, 25–49.9%, 50–89.9%, and 90–100%) based on data from 2004, 2007, and 2008 for all countries of interest, with the exception of Hong Kong, Macao, the Maldives, Singapore, and Taiwan.

Table 3: Overview of AsiaBarometer data

Country	Year	Data collection method(s)	Survey language(s)	Sample size
Bangladesh	2005	Face-to-face interviews	NA	1008
Bhutan	2005	Face-to-face interviews	Dzongkha	801
Cambodia	2004	Face-to-face interviews	Khmer	812
China	2003	Face-to-face interviews	Mandarin Chinese	800
	2004	Face-to-face interviews	Mandarin Chinese	1000
	2006	Face-to-face interviews	Mandarin Chinese	2000
Hong Kong	2006	Face-to-face interviews	Cantonese	1000
India	2003	Face-to-face interviews	Hindi, English, Bengali, Tamil	822
	2005	Face-to-face interviews	Hindi	1238
Indonesia	2004	Face-to-face interviews	Bahasa Indonesia	825
	2007	Face-to-face interviews	Bahasa Indonesia	1000
Japan	2003	Placement method	Japanese	857
	2004	Face-to-face interviews	Japanese	825
	2006	Face-to-face interviews	Japanese	1003
Laos	2004	Face-to-face interviews	Lao	800
	2007	Face-to-face interviews	Lao	1000
Malaysia	2003	Face-to-face interviews	Malay, English, Chinese	800
	2004	Face-to-face interviews	Malay, English, Mandarin Chinese	800
	2007	Face-to-face interviews	Malay, English, Chinese	1000
Mongolia	2005	Face-to-face interviews	Mongolian	800
Myanmar	2003	Face-to-face interviews	Burmese	800
	2004	Face-to-face interviews	Burmese	800
	2007	Face-to-face interviews	Burmese	1000
Nepal	2005	Face-to-face interviews	Nepalese	800
Pakistan	2005	Face-to-face interviews	Urdu	1086
Philippines	2004	Face-to-face interviews	Tagalog, Cebuano	800
	2007	Face-to-face interviews	Tagalog, Cebuano	1000
Singapore	2004	Face-to-face interviews	Malay, Mandarin Chinese, Tamil, English	800
	2006	Face-to-face interviews	Malay, Mandarin Chinese, Tamil, English	1038
South Korea	2003	Face-to-face interviews	Korean	800
	2004	Face-to-face interviews	Korean	819
	2006	Face-to-face interviews	NA	1000
Sri Lanka	2003	Face-to-face interviews	Singhalese	800
	2005	Face-to-face interviews	Singhalese, Tamil	813
Taiwan	2006	Face-to-face interviews	Mandarin Chinese, Taiwanese	1006
Thailand	2003	Face-to-face interviews	Thai	800
	2004	Face-to-face interviews	Thai	800
	2007	Face-to-face interviews	Thai	1000
Vietnam	2003	Face-to-face interviews	Vietnamese	800
	2004	Face-to-face interviews	Vietnamese	800
	2006	Face-to-face interviews	Vietnamese	1000

Notes: This overview table is based on the Sampling Procedures made available by the Asian Baromter for each country and wave (National Taiwan University, 2003; 2008, 2012). NA = Authors could not locate the corresponding information in the records.

Table 4: Overview of Asian Barometer Data

Country	Year	Data collection method(s)	Survey language(s)	Sample size
Cambodia	2008	Face-to-face interviews	Khmer	1000
	2012	Face-to-face interviews	NA	1200
China	2002	Face-to-face interviews	Mandarin Chinese, Other	3183
	2007	Face-to-face interviews	Mandarin Chinese	4786
	2011	Face-to-face interviews	NA	3473
Hong Kong	2001	Face-to-face interviews	Chinese	811
	2007	Face-to-face interviews	Chinese	1813
	2012	Face-to-face interviews	NA	1207
Indonesia	2006	Face-to-face interviews	Bahasa Indonesia	1440
	2011	Face-to-face interviews	NA	1550
Japan	2003	Face-to-face interviews	Japanese	1418
	2007	Face-to-face interviews	Japanese	1067
	2011	Face-to-face interviews	NA	1880
Malaysia	2007	Face-to-face interviews	English, Malay, Chinese, Iban, Others	1200
	2011	Face-to-face interviews	NA	1214
Mongolia	2002	Face-to-face interviews	NA	1096
	2006	Face-to-face interviews	Mongolian	1211
	2010	Face-to-face interviews	NA	1210
Philippines	2002	Face-to-face interviews	Tagalog, Cebuano, Ilonggo, Ilocano, Bicolano	1200
	2005	Face-to-face interviews	Tagalog, Cebuano, Ilonggo, Ilocano, Bicolano, Waray	1200
	2010	Face-to-face interviews	NA	1200
Singapore	2006	Face-to-face interviews	Chinese, Malay, English	1012
	2010	Face-to-face interviews	NA	1000
South Korea	2003	Face-to-face interviews	NA	1500
	2006	Face-to-face interviews	Korean	1212
	2011	Face-to-face interviews	NA	1207
Taiwan	2001	Face-to-face interviews	Mandarin Chinese, Taiwan-ese, Other	1415
	2006	Face-to-face interviews	Mandarin Chinese, Taiwanese	1492
	2010	Face-to-face interviews	NA	1592
Thailand	2001	Face-to-face interviews	Thai, Malay, regional dialects	1546
	2006	Face-to-face interviews	Thai, Malay, regional dialects	1546
	2010	Face-to-face interviews	NA	1512
Vietnam	2005	Face-to-face interviews	Vietnamese	1200
	2010	Face-to-face interviews	NA	1191

Notes: This overview table is based on the Field Reports made available by the AsiaBaromter for each country and wave (Inoguchi, 2003; 2004; 2005; 2006; 2007). NA = Authors could not locate the corresponding information in the records and/or Field Reports for the third wave of data collection were not made available to the authors.

Table 5: Overview of Gallup World Poll data

Country	Year	Data collection method(s)	Survey language(s)	Sample size
Afghanistan	2008	Face-to-face interviews	Dari, Pashto	1010
	2009	Face-to-face interviews	Dari, Pashto	2000
	2010	Face-to-face interviews	Dari, Pashto	1000
	2011	Face-to-face interviews	Dari, Pashto	1000
	2012	Face-to-face interviews	Dari, Pashto	2000
	2013	Face-to-face interviews	Dari, Pashto	1000
	2014	Face-to-face interviews	Dari, Pashto	1000
	2015	Face-to-face interviews	Dari, Pashto	1000
Bangladesh	2006	Face-to-face interviews	Bengali	1048
	2007	Face-to-face interviews	Bengali	1200
	2008	Face-to-face interviews	Bengali	1000
	2009	Face-to-face interviews	Bengali	1000
	2010	Face-to-face interviews	Bengali	1000
	2011	Face-to-face interviews	Bengali	1000
	2012	Face-to-face interviews	Bengali	3000
	2013	Face-to-face interviews	Bengali	1000
	2014	Face-to-face interviews	Bengali	1000
	2015	Face-to-face interviews	Bengali	1000
Bhutan	2013	Face-to-face interviews	Dzongkha	1000
	2014	Face-to-face interviews	Dzongkha	1020
	2015	Face-to-face interviews	Dzongkha	1020
Cambodia	2006	Face-to-face interviews	Khmer	1000
	2007	Face-to-face interviews	Khmer	1000
	2008	Face-to-face interviews	Khmer	1024
	2009	Face-to-face interviews	Khmer	1000
	2010	Face-to-face interviews	Khmer	1000
	2011	Face-to-face interviews	Khmer	1000
	2012	Face-to-face interviews	Khmer	1000
	2013	Face-to-face interviews	Khmer	1000
	2014	Face-to-face interviews	Khmer	1000
	2015	Face-to-face interviews	Khmer	1000
China	2006	Face-to-face interviews	Chinese	3730
	2007	Face-to-face interviews, Land-line telephone interviews	Chinese	4238
	2008	Face-to-face interviews, Land-line telephone interviews	Chinese	4383
	2009	Face-to-face interviews, Land-line telephone interviews	Chinese	4201
	2010	Face-to-face interviews, Land-line telephone interviews	Chinese	4151
	2011	Face-to-face interviews, Land-line telephone interviews	Chinese	4220
	2012	Face-to-face interviews, Land-line telephone interviews	Chinese	9413
	2013	Face-to-face interviews, Land-line telephone interviews	Chinese	4244

China (cont'd)	2014	Face-to-face interviews, Land-line telephone interviews	Chinese	4696
	2015	Face-to-face interviews, Tele-phone interviews	Chinese	4265
Hong Kong	2006	Landline telephone interviews	Chinese	800
	2008	Landline telephone interviews	Chinese	751
	2009	Landline telephone interviews	Chinese	755
	2010	Landline telephone interviews	Chinese	756
	2011	Landline and mobile tele-phone interviews	Chinese	1028
	2012	Landline and mobile tele-phone interviews	Chinese	1006
	2014	Landline and mobile tele-phone interviews	Chinese	2017
India	2006	Face-to-face interviews	English, Hindi, Tamil, Kan-nada, Telugu, Marathi, Gujarati, Bengali, Malayalam	2100
	2007	Face-to-face interviews	English, Hindi, Tamil, Kan-nada, Telugu, Marathi, Gujarati, Bengali, Malayalam	3186
	2008	Face-to-face interviews	English, Hindi, Tamil, Kan-nada, Telugu, Marathi, Gujarati, Bengali, Malayalam	2000
	2009	Face-to-face interviews	English, Hindi, Tamil, Kan-nada, Telugu, Marathi, Gujarati, Bengali, Malayalam, Odia	3010
	2010	Face-to-face interviews	Hindi, Tamil, Kannada, Tel-ugu, Marathi, Gujarati, Bengali, Malayalam, Odia, Punjabi	6000
	2011	Face-to-face interviews	Hindi, Tamil, Kannada, Tel-ugu, Marathi, Gujarati, Bengali, Malayalam, Odia, Punjabi, Assamese	3518
	2012	Face-to-face interviews	Hindi, Tamil, Kannada, Tel-ugu, Marathi, Gujarati, Bengali, Malayalam, Odia, Punjabi, Assamese	12720
	2013	Face-to-face interviews	Hindi, Tamil, Kannada, Tel-ugu, Marathi, Gujarati, Bengali, Malayalam, Odia, Punjabi, Assamese	1500
	2014	Face-to-face interviews	Hindi, Tamil, Kannada, Tel-ugu, Marathi, Gujarati, Bengali, Malayalam, Odia, Punjabi, Assamese	3000
	2015	Face-to-face interviews	Assamese, Bengali, Gujarati, Hindi, Kannada, Malayalam, Marathi, Odia, Punjabi, Tamil, Telugu	3000

Indonesia	2006	Face-to-face interviews	Bahasa Indonesia	1180
	2007	Face-to-face interviews	Bahasa Indonesia	1000
Indonesia (cont'd)	2008	Face-to-face interviews	Bahasa Indonesia	1050
	2009	Face-to-face interviews	Bahasa Indonesia	1080
	2010	Face-to-face interviews	Bahasa Indonesia	1080
	2011	Face-to-face interviews	Bahasa Indonesia	1000
	2012	Face-to-face interviews	Bahasa Indonesia	3000
	2013	Face-to-face interviews	Bahasa Indonesia	1000
	2014	Face-to-face interviews	Bahasa Indonesia	1000
	2015	Face-to-face interviews	Bahasa Indonesia	1000
Japan	2005	Landline telephone interviews	Japanese	1000
	2007	Landline telephone interviews	Japanese	1150
	2008	Landline telephone interviews	Japanese	3000
	2009	Landline telephone interviews	Japanese	1000
	2010	Landline telephone interviews	Japanese	1000
	2011	Landline telephone interviews	Japanese	1000
	2012	Landline telephone interviews	Japanese	2000
	2013	Landline telephone interviews	Japanese	1001
	2014	Landline telephone interviews	Japanese	2006
	2015	Landline telephone interviews	Japanese	1003
Laos	2006	Face-to-face interviews	Lao	1001
	2007	Face-to-face interviews	Lao	1000
	2008	Face-to-face interviews	Lao	1000
	2011	Face-to-face interviews	Lao	1000
	2012	Face-to-face interviews	Lao	1000
Malaysia	2006	Face-to-face interviews	Bahasa Malay, Chinese, English	1012
	2007	Face-to-face interviews	Bahasa Malay, Chinese, English	1233
	2008	Face-to-face interviews	Bahasa Malay, Chinese	1000
	2009	Face-to-face interviews	Bahasa Malay, Chinese, English	1011
	2010	Face-to-face interviews	Bahasa Malay, Chinese, English	1000
	2011	Face-to-face interviews	Bahasa Malay, Chinese, English	1000
	2012	Face-to-face interviews	Bahasa Malay, Chinese, English	1000
	2013	Face-to-face interviews	Bahasa Malay, Chinese, English	1000
	2014	Face-to-face interviews	Bahasa Malay, Chinese, English	2008
	2015	Face-to-face interviews	Bahasa Malay, Chinese, English	1002
Mongolia	2007	Face-to-face interviews	Mongolian	1000
	2008	Face-to-face interviews	Mongolian	1000
	2010	Face-to-face interviews	Mongolian	1000
	2011	Face-to-face interviews	Mongolian	1000
	2012	Face-to-face interviews	Mongolian	1000
	2013	Face-to-face interviews	Mongolian	1000

	2014	Face-to-face interviews	Mongolian	1000
	2015	Face-to-face interviews	Mongolian	1000
Myanmar	2012	Face-to-face interviews	Burmese	1020
	2013	Face-to-face interviews	Burmese	1020
	2014	Face-to-face interviews	Burmese	1020
	2015	Face-to-face interviews	Burmese	1020
Nepal	2006	Face-to-face interviews	Nepali	1002
	2007	Face-to-face interviews	Nepali	1000
	2008	Face-to-face interviews	Nepali	1003
	2009	Face-to-face interviews	Nepali	1002
	2010	Face-to-face interviews	Nepali	1000
	2011	Face-to-face interviews	Nepali	1000
	2012	Face-to-face interviews	Nepali	2000
	2013	Face-to-face interviews	Nepali	1050
	2014	Face-to-face interviews	Nepali	1050
	2015	Face-to-face interviews	Nepali	1000
Pakistan	2005	Face-to-face interviews	Urdu	1001
	2007	Face-to-face interviews	Urdu	1502
	2008	Face-to-face interviews	Urdu	2484
	2009	Face-to-face interviews	Urdu	3122
	2010	Face-to-face interviews	Urdu	1030
	2011	Face-to-face interviews	Urdu	1000
	2012	Face-to-face interviews	Urdu	3016
	2013	Face-to-face interviews	Urdu	1000
	2014	Face-to-face interviews	Urdu	1000
	2015	Face-to-face interviews	Urdu	1000
Philippines	2006	Face-to-face interviews	Filipino, Iluko, Hiligaynon, Cebuano, Bicol	1200
	2007	Face-to-face interviews	Filipino, Iluko, Hiligaynon, Cebuano, Bicol	1000
	2008	Face-to-face interviews	Filipino, Iluko, Hiligaynon, Cebuano,Bicol, Tausug, Waray, Chavacano	1000
	2009	Face-to-face interviews	Filipino, Iluko, Hiligaynon, Cebuano, Bicol, Waray, Maguindanaon	1000
	2010	Face-to-face interviews	Filipino, Iluko, Hiligaynon, Cebuano, Bicol, Waray, Maranao	1000
	2011	Face-to-face interviews	Filipino, Iluko, Hiligaynon, Cebuano, Bicol, Waray, Maguindanaon, Chavacano	1000
	2012	Face-to-face interviews	Filipino, Iluko, Hiligaynon, Cebuano, Bicol, Waray, Maguindanaon	2000
	2013	Face-to-face interviews	Filipino, Iluko, Hiligaynon, Cebuano, Bicol, Waray, Maguindanaon	1000

	2014	Face-to-face interviews	Filipino, Iluko, Hiligaynon, Cebuano, Bicol, Waray, Maguindanaon, Maranao	1000
Philippines (cont'd)	2015	Face-to-face interviews	Bicol, Cebuano, English, Filipino (Tagalog), Hiligaynon, Iluko, Maranao, Waray	1000
Singapore	2006	Face-to-face interviews	English, Chinese, Bahasa Malay	1095
	2007	Face-to-face interviews	English, Chinese, Bahasa Malay	1000
	2008	Face-to-face interviews	English, Chinese, Bahasa Malay	2551
	2009	Face-to-face interviews	Chinese, English	1005
	2010	Face-to-face interviews	Chinese, English	1001
	2011	Face-to-face interviews	English, Chinese, Bahasa Malay	1000
	2012	Face-to-face interviews	English, Chinese, Bahasa Malay	1000
	2014	Face-to-face interviews	English, Chinese, Bahasa Malay	1000
	2015	Face-to-face interviews	English, Chinese, Bahasa Malay	1000
South Korea	2006	Landline telephone interviews	Korean	1100
	2007	Landline telephone interviews	Korean	1000
	2008	Landline telephone interviews	Korean	1000
	2009	Landline telephone interviews	Korean	1000
	2010	Landline telephone interviews	Korean	1000
	2011	Landline and mobile telephone interviews	Korean	1001
	2012	Landline and mobile telephone interviews	Korean	2000
	2013	Landline and mobile telephone interviews	Korean	1000
	2014	Landline and mobile telephone interviews	Korean	2000
	2015	Landline and mobile telephone interviews	Korean	1000
Sri Lanka	2006	Face-to-face interviews	Sinhala, Tamil	1033
	2007	Face-to-face interviews	Sinhala, Tamil	1000
	2008	Face-to-face interviews	Sinhala, Tamil	1000
	2009	Face-to-face interviews	Sinhala, Tamil	1000
	2010	Face-to-face interviews	Sinhala, Tamil	1030
	2011	Face-to-face interviews	Sinhala, Tamil	1000
	2012	Face-to-face interviews	Sinhala, Tamil	2000
	2013	Face-to-face interviews	Sinhala, Tamil	1030
	2014	Face-to-face interviews	Sinhala, Tamil	1062
	2015	Face-to-face interviews	Sinhala, Tamil	1062
Taiwan	2006	Landline telephone interviews	Chinese	1002
	2010	Landline telephone interviews	Chinese	1000

	2011	Landline and mobile telephone interviews	Chinese	1001
	2012	Landline and mobile telephone interviews	Chinese	1000
Taiwan (cont'd)	2014	Landline and mobile telephone interviews	Chinese	2000
	2015	Landline and mobile telephone interviews	Chinese	1000
Thailand	2006	Face-to-face interviews	Thai	1410
	2007	Face-to-face interviews	Thai	1006
	2008	Face-to-face interviews	Thai	1038
	2009	Face-to-face interviews	Thai	1019
	2010	Face-to-face interviews	Thai	1000
	2011	Face-to-face interviews	Thai	1000
	2012	Face-to-face interviews	Thai	2000
	2013	Face-to-face interviews	Thai	1000
	2014	Face-to-face interviews	Thai	1000
	2015	Face-to-face interviews	Thai	1000
Vietnam	2006	Face-to-face interviews	Vietnamese	1023
	2007	Face-to-face interviews	Vietnamese	1018
	2008	Face-to-face interviews	Vietnamese	1016
	2009	Face-to-face interviews	Vietnamese	1009
	2010	Face-to-face interviews	Vietnamese	1000
	2011	Face-to-face interviews	Vietnamese	1000
	2012	Face-to-face interviews	Vietnamese	2000
	2013	Face-to-face interviews	Vietnamese	1017
	2014	Face-to-face interviews	Vietnamese	1000
	2015	Face-to-face interviews	Vietnamese	1000

Notes: This overview table is based on the Country Data Set Details made available by the Gallup Organization for each country and wave (GWP, 2015).

Table 6: Overview of World Values Survey data

Country	Year	Data collection method(s)	Survey language(s)	Sample size
China	2007	Face-to-face interviews	Chinese	1991
	2012	Face-to-face interviews	Chinese	2300
Hong Kong	2005	Face-to-face interviews	Chinese	1252
	2013	Face-to-face interviews	NA	1000
India	2006	Face-to-face interviews	Assamese, Bengali, Gujarati, Hindi, Kannada, Malayalam, Marathi, Oriya, Tamil, Telugu	2001
	2012	Face-to-face interviews	Assamese, Bengali, English, Gujarati, Hindi, Kannada, Malayalam, Marathi, Punjabi, Telugu	4078
	2014	Face-to-face interviews	Assamese, Bengali, Gujarati, Hindi, Kannada, Malayalam, Marathi, Oriya, Tamil, Punjabi	1581
Indonesia	2006	Face-to-face interviews	Indonesia	2015
Japan	2005	Postal survey	Japanese	1096
	2010	Face-to-face interviews, placement method	Japanese	1650
Malaysia	2006	Face-to-face interviews	English, Malay, Mandarin	1201
	2011	Face-to-face interviews	English, Malay, Mandarin	1300
Pakistan	2012	Face-to-face interviews	Urdu	1200
Philippines	2012	Face-to-face interviews	Filipino, Cebuano, Iluko, Hiligaynon, Bicol, Waray, Chavacano, Maranao	1200
Singapore	2012	Face-to-face interviews	English, Chinese, Malay, Tamil	1972
South Korea	2005	Face-to-face interviews	Korean	1200
	2010	Face-to-face interviews	Korean	1200
Taiwan	2006	Face-to-face interviews	Mandarin, Taiwanese, Hakka	1227
	2012	Face-to-face interviews	NA	1238
Thailand	2007	Face-to-face interviews	Thai, Malay, Others	1534
	2013	Face-to-face interviews	NA	1200
Vietnam	2006	Face-to-face interviews	Vietnamese	1495

Notes: This overview table is based on the Technical Records and Study Descriptions made available by the World Values Survey for each country and wave (WVS, 2015). NA = Authors could not locate the corresponding information in the records.

Table 7: Country coverage across time

	Wave 1 (2004-2008)												Wave 2 (2009-2015)											
	GWP	AnB	AB	WVS	CCS	EO	GG	HR	PEW	PP	SB	VBD	GWP	AnB	AB	WVS	CCS	EO	GG	HR	PEW	PP	SB	VBD
Afghanistan	GWP		AB		CCS	EO	GG		PEW	PP		VBD	GWP				CCS	EO	GG	HR	PEW	PP		
Bangladesh	GWP		AB		CCS	EO	GG	HR	PEW	PP	SB	VBD	GWP				CCS	EO	GG	HR	PEW	PP	SB	
Bhutan			AB		CCS	EO	GG	HR	PEW	PP	SB	VBD	GWP				CCS	EO	GG	HR	PEW	PP	SB	
Cambodia	GWP	AnB	AB		CCS	EO	GG	HR	PEW	PP	SB	VBD	GWP	AnB			CCS	EO	GG	HR	PEW	PP	SB	
China	GWP	AnB	AB	WVS	CCS	EO	GG	HR	PEW	PP	SB	VBD	GWP	AnB		WVS	CCS	EO	GG	HR	PEW	PP	SB	
Hong Kong	GWP	AnB	AB	WVS				HR	PEW		SB		GWP	AnB		WVS				HR	PEW		SB	
India	GWP		AB	WVS	CCS	EO	GG	HR	PEW	PP	SB	VBD	GWP			WVS	CCS	EO	GG	HR	PEW	PP	SB	
Indonesia	GWP	AnB	AB	WVS	CCS	EO	GG	HR	PEW	PP	SB	VBD	GWP	AnB			CCS	EO	GG	HR	PEW	PP	SB	
Japan	GWP	AnB	AB	WVS	CCS		GG	HR	PEW	PP	SB	VBD	GWP	AnB		WVS	CCS		GG	HR	PEW	PP	SB	
SouthKorea	GWP	AnB	AB	WVS	CCS	EO	GG		PEW	PP	SB	VBD	GWP	AnB		WVS	CCS	EO	GG	HR	PEW	PP	SB	
Laos	GWP		AB		CCS	EO	GG		PEW	PP	SB	VBD	GWP				CCS	EO	GG	HR	PEW	PP	SB	
Malaysia	GWP	AnB	AB	WVS	CCS	EO	GG	HR	PEW	PP	SB	VBD	GWP	AnB		WVS	CCS	EO	GG	HR	PEW	PP	SB	
Mongolia	GWP	AnB	AB		CCS	EO	GG	HR	PEW	PP	SB	VBD	GWP	AnB			CCS	EO	GG	HR	PEW	PP	SB	
Myanmar			AB		CCS	EO	GG	HR	PEW	PP	SB	VBD	GWP				CCS	EO	GG	HR	PEW	PP	SB	
Nepal	GWP		AB		CCS	EO	GG	HR	PEW	PP	SB	VBD	GWP				CCS	EO	GG	HR	PEW	PP	SB	
Pakistan	GWP	AnB	AB		CCS	EO	GG	HR	PEW	PP	SB	VBD	GWP	AnB		WVS	CCS	EO	GG	HR	PEW	PP	SB	
Philippines	GWP	AnB	AB		CCS	EO	GG	HR	PEW	PP	SB	VBD	GWP	AnB		WVS	CCS	EO	GG	HR	PEW	PP	SB	
Singapore	GWP		AB			EO	GG	HR	PEW	PP	SB		GWP			WVS		EO	GG	HR	PEW	PP	SB	
Sri Lanka	GWP	AnB	AB		CCS	EO	GG	HR	PEW	PP	SB	VBD	GWP	AnB			CCS	EO	GG	HR	PEW	PP	SB	
Taiwan	GWP	AnB	AB	WVS	CCS	EO		HR	PEW	PP	SB		GWP	AnB		WVS	CCS	EO		HR	PEW	PP	SB	
Thailand	GWP		AB	WVS	CCS	EO	GG	HR	PEW	PP	SB	VBD	GWP			WVS	CCS	EO	GG	HR	PEW	PP	SB	
Vietnam	GWP	AnB	AB	WVS	CCS	EO	GG	HR	PEW	PP	SE	VBD	GWP	AnB			CCS	EO	GG	HR	PEW	PP	SB	

Notes: GWP = Gallup World Poll; AnB = Asian Barometer; AB = Asia Barometer; WVS = World Values Survey; CCS = Core Civil Society Index; EO = Equality of Opportunity; GG = Group Grievance; HR = Homicide Rate; PEW = Government Restrictions Index, Social Hostilities Index; PP = Political Participation; SB = Shadow Economy; VBD = Voluntary Unpaid Blood Donations.

6.2 Appendix B: Technical output

6.2.1 Final CFA factor loadings

Table 8: Final wave-specific CFA solution – Domain 1: Social relations

Variable	Label	Loading (Cronbach's α) Wave 1	Wave 2
Dimension 1.1 – Social Networks		(.777)	(.782)
cntct_anb	On average, about how many people do you have contact with in a typical weekday?	.768	.800
counthelp_gwp	If you were in trouble, do you have relatives or friends you can count on to help you whenever you need them to, or not?	.838	.864
oppmkfr_gwp	In the city or area where you live, are you satisfied or dissatisfied with the opportunities to meet people and make friends?	—	.521
Dimension 1.2 – Trust in people		(.674)	(.566)
pplhlp_ab	Do you think that people generally try to be helpful or do you think that they mostly look out for themselves?	.673	—
trstothr_anb	How much trust do you have in: Other people you interact with?	.315	.351
trstppl_ab	Generally, do you think people can be trusted or do you think that you can't be too careful in dealing with people?	.793	—
trstppl_gwp	Generally speaking, would you say that most people can be trusted or that you have to be careful in dealing with people?	—	.800
trstprs_wvs	I'd like to ask you how much you trust people from various groups: People you know personally?	.513	.454
Dimension 1.3 – Acceptance of diversity		(.782)	(.818)
gri_pew	Government restrictions on religion	-.507	-.541
grogri_ffp	Group Grievance	-.830	-.825
shi_pew	Social hostilities involving religion	-.849	-.923

Notes: Abbreviation after underscore refers to data source as follows: ab = Asia Barometer, anb = Asian Barometer, bti = Bertelsmann Transformation Index, ffp = Fund for Peace, gwp = Gallup World Poll, pew = PEW Research Center, sb = Schneider et al. (2010), unodc = United Nations Office on Drugs and Crime, van = Vanhanen (2014), vdem = Varieties of Democracy Project, wvs = World Values Survey.

Table 9: Final wave-specific CFA solution – Domain 2: Connectedness

Variable	Label	Loading (Cronbach's α) Wave 1	Wave 2
Dimension 2.1 – Identification		(.809)	(.793)
ctzcom_wvs	I see myself as part of my local community	.914	.893
prdctzn_anb	How proud are you to be a citizen of your country?	.921	.964
rcmndct_gwp	Would you recommend the city or area where you live to a friend or associate as a place to live, or not?	.335	.306
Dimension 2.2 – Trust in institutions		(.942)	(.956)
cnfcrt_gwp	In this country, do you have confidence in the judicial system and courts, or not?	.910	.899
cnffin_gwp	In this country, do you have confidence in financial institutions or banks, or not?	.892	.914
cnfplc_gwp	In the city or area where you live, do you have confidence in the local police force, or not?	.752	.782
hnstel_gwp	In this country, do you have confidence in the honesty of elections, or not?	.787	.874
trstcvlsrvc_anb	How much trust do you have in the following institutions: Civil service?	.826	.863
trstnws_anb	How much trust do you have in the following institutions: Newspapers?	.795	.817
trstprlmnt_anb	How much trust do you have in the following institutions: Parliament?	.883	.935
Dimension 2.3 – Perception of fairness		(.599)	(.630)
crptgov_gwp	Is corruption widespread throughout the government in this country, or not?	-.686	-.703
eqopp_bti	Equality of Opportunity	.341	.335
pvrty_anb	What are the most important problems facing this country that government should address: Poverty/destitution?	-.674	-.764

Notes: Abbreviation after underscore refers to data source as follows: ab = Asia Barometer, anb = Asian Barometer, bti = Bertelsmann Transformation Index, ffp = Fund for Peace, gwp = Gallup World Poll, pew = PEW Research Center, sb = Schneider et al. (2010), unodc = United Nations Office on Drugs and Crime, van = Vanhanen (2014), vdem = Varieties of Democracy Project, wvs = World Values Survey.

Table 10: Final wave-specific CFA solution – Domain 3: Focus on the common good

Variable	Label	Loading (Cronbach's α) Wave 1	Wave 2
Dimension 3.1 – Solidarity and helpfulness		(.399)	(.449)
blddon_who	Voluntary unpaid blood donation	.358	—
dntmny_gwp	Have you done any of the following in the past month: Donated money to charity?	.504	.526
hlpstr_gwp	Have you done any of the following in the past month: Helped a stranger or someone you didn't know who needed help?	.413	.448
sndmny_gwp	In the past 12 months, did this household SEND help in the form of money or goods to another individual living inside this country, living in another country, both or neither?	—	.413
Dimension 3.2 – Respect for social rules		(.738)	(.746)
homicide_undoc	Homicide rate	-.749	-.754
mnystln_gwp	In the last 12 months, have you had money or property stolen from you or another household member?	-.669	-.701
sfwlk_gwp	Do you feel safe walking alone at night in the city or area where you live?	.696	.656
shaeco_sb	Shadow Economy	-.442	—
Dimension 3.3 – Civic participation		(.626)	(.583)
ccsi_vdem	Core Civil Society Index	.354	.358
polpart_van	Political Participation	.477	.397
vcopnoff_gwp	In the past month have you: Voiced your opinion to a public official?	.628	.652
vlnttm_gwp	In the past month have you: Volunteered your time to an organization?	.699	.611

Notes: Abbreviation after underscore refers to data source as follows: ab = Asia Barometer, anb = Asian Barometer, bti = Bertelsmann Transformation Index, ffp = Fund for Peace, gwp = Gallup World Poll, pew = PEW Research Center, sb = Schneider et al. (2010), unodc = United Nations Office on Drugs and Crime, van = Vanhanen (2014), vdem = Varieties of Democracy Project, wvs = World Values Survey.

6.2.2 Overview of pantemporal analysis

Table 11: Pantemporal final factor solution – Domain 1: Social relations

Variable	Label	Loading
Dimension 1.1 – Social Networks, Cronbach's α = .826		
cntct_anb	On average, about how many people do you have contact with in a typical week day?	.908
counthelp_gwp	If you were in trouble, do you have relatives or friends you can count on to help you whenever you need them to, or not?	.823
oppmkfr_gwp	In the city or area where you live, are you satisfied or dissatisfied with the opportunities to meet people and make friends?	.515
Dimension 1.2 – Trust in People, Cronbach's α = .654		
pplhlp_ab	Do you think that people generally try to be helpful or do you think that they mostly look out for themselves?	.663
trstothr_anb	How much trust do you have in: Other people you interact with?	.317
trstppl_ab	Generally, do you think people can be trusted or do you think that you can't be too careful in dealing with people?	.784
trstppl_gwp	Generally speaking, would you say that most people can be trusted or that you have to be careful in dealing with people?	
trstprs_wvs	I'd like to ask you how much you trust people from various groups: People you know personally?	.453
Dimension 1.3 – Acceptance of Diversity, Cronbach's α = .792		
gri_pew	Government restrictions on religion	-.512
grogri_ffp	Group Grievance	-.828
shi_pew	Social hostilities involving religion	-.874

Notes: Abbreviation after underscore refers to data source as follows: ab = Asia Barometer, anb = Asian Barometer, bti = Bertelsmann Transformation Index, ffp = Fund for Peace, gwp = Gallup World Poll, pew = PEW Research Center, sb = Schneider et al. (2010), unodc = United Nations Office on Drugs and Crime, van = Vanhanen (2014), vdem = Varieties of Democracy Project, wvs = World Values Survey.

Table 12: Pantemporal final factor solution – Domain 2: Connectedness

Variable	Label	Loading
Dimension 2.1 – Identification, Cronbach's α = .782		
ctzcom_wvs	I see myself as part of my local community	.856
prdctzn_anb	How proud are you to be a citizen of your country?	.967
rcmndct_gwp	Would you recommend the city or area where you live to a friend or associate as a place to live, or not?	.311
Dimension 2.2 – Trust in Institutions, Cronbach's α = .946		
cnfcrt_gwp	In this country, do you have confidence in the judicial system and courts?	.900
cnffin_gwp	In this country, do you have confidence in financial institutions or banks, or not?	.898
cnfplc_gwp	In the city or area where you live, do you have confidence in the local police force, or not?	.755
hnstel_gwp	In this country, do you have confidence in the honesty of elections, or not?	.819
trstcvlsrvc_anb	How much trust do you have in the following institutions: Civil service?	.838
trstnws_anb	How much trust do you have in the following institutions: Newspapers?	.795
trstprlmnt_anb	How much trust do you have in the following institutions: Parliament?	.905
Dimension 2.3 – Perception of Fairness, Cronbach's α = .558		
crptgov_gwp	Is corruption widespread throughout the government in this country, or not?	-.687
eqopp_bti	Equality of Opportunity	.331
pvrty_anb	What are the most important problems facing this country that government should address: Poverty/destitution?	-.672

Notes: Abbreviation after underscore refers to data source as follows: ab = Asia Barometer, anb = Asian Barometer, bti = Bertelsmann Transformation Index, ffp = Fund for Peace, gwp = Gallup World Poll, pew = PEW Research Center, sb = Schneider et al. (2010), unodc = United Nations Office on Drugs and Crime, van = Vanhanen (2014), vdem = Varieties of Democracy Project, wvs = World Values Survey.

Table 13: Pantemporal final factor solution – Domain 3: Focus on the common good

Variable	Label	Loading
Dimension 3.1 – Solidarity and Helpfulness, Cronbach's α = .462		
blddon_who	Voluntary unpaid blood donation	.350
dntmny_gwp	Have you done any of the following in the past month: Donated money to charity?	.503
hlpstr_gwp	Have you done any of the following in the past month: Helped a stranger or someone you didn't know who needed help?	.420
sndmny_gwp	In the past 12 months, did this household SEND help in the form of money or goods to another individual living inside this country, living in another country, both or neither?	.404
Dimension 3.2 – Respect for Social Rules, Cronbach's α = .727		
homicide _unodc	Homicide rate	-.743
mnystln_gwp	In the last 12 months, have you had money or property stolen from you or another household member?	-.673
sfwlk_gwp	Do you feel safe walking alone at night in the city or area where you live?	.660
shaeco_sb	Shadow Economy	-.438
Dimension 3.3 – Civic Participation, Cronbach's α = .590		
ccsi_vdem	Core Civil Society Index	.345
polpart_van	Political Participation	.418
vcopnoff_gwp	In the past month have you: Voiced your opinion to a public official?	.635
vlnttm_gwp	In the past month have you: Volunteered your time to an organization?	.639

Notes: Abbreviation after underscore refers to data source as follows: ab = Asia Barometer, anb = Asian Barometer, bti = Bertelsmann Transformation Index, ffp = Fund for Peace, gwp = Gallup World Poll, pew = PEW Research Center, sb = Schneider et al. (2010), unodc = United Nations Office on Drugs and Crime, van = Vanhanen (2014), vdem = Varieties of Democracy Project, wvs = World Values Survey.

6.2.3 Cohesion ranking tables

Table 14: Cohesion and dimension scores – Wave 2 (2009-2015)

	cohw2	d11w2	d12w2	d13w2	d21w2	d22w2	d23w2	d31w2	d32w2	d33w2
Hong Kong	0,55	0,40	1,20	0,86	-2,05	0,13	2,01	1,57	1,53	-0,72
Singapore	0,51	0,60	0,57	1,30	-1,11	0,89	2,44	-0,54	1,65	-1,18
Thailand	0,41	1,62	-0,10	-0,65	1,80	0,04	-0,98	1,42	-0,25	0,82
Bhutan	0,39	0,61	0,12	0,47	0,65	1,37	-0,08	0,76	-0,58	0,16
Taiwan	0,31	0,64	1,53	1,41	-1,13	-1,40	0,70	0,97	0,36	-0,30
Sri Lanka	0,28	0,44	-0,66	-1,15	0,67	0,65	0,00	0,89	0,33	1,37
Japan	0,23	0,62	1,09	0,93	-0,75	-0,71	0,86	-1,57	0,97	0,63
Laos	0,21	-0,46	-0,60	0,57	0,14	1,23	0,92	1,10	-1,37	0,41
Malaysia	0,19	0,53	-1,06	0,18	1,08	0,58	0,47	-0,11	-0,33	0,34
Philippi-nes	0,15	0,69	-0,81	0,29	0,55	-0,18	-0,61	0,33	-1,16	2,24
Vietnam	0,12	0,11	0,15	0,06	1,14	1,35	0,11	-1,24	0,35	-0,91
Myanmar	0,07	-0,33	-0,80	-0,93	0,07	0,21	0,21	1,37	0,93	-0,10
China	0,04	0,64	2,89	-0,21	-0,20	1,05	-0,01	-1,80	0,54	-2,50
S. Korea	-0,01	-0,28	0,21	1,44	-1,42	-1,58	0,29	0,38	0,61	0,23
Mongolia	-0,02	1,42	-0,65	1,23	0,82	-1,37	-1,01	0,18	-2,12	1,34
Indonesia	-0,12	0,45	0,16	-0,94	0,09	-0,14	-1,98	0,02	1,10	0,17
Cambodia	-0,19	-0,56	-1,25	0,90	0,69	0,79	-0,21	-0,96	-0,30	-0,83
Nepal	-0,35	-0,31	-0,66	-0,57	0,30	-0,21	-0,80	-1,12	0,09	0,14
Bangla-desh	-0,46	-1,31	-1,02	-1,11	0,34	0,38	-0,17	-0,65	0,30	-0,86
India	-0,65	-1,36	-0,43	-1,21	-1,83	0,15	-0,57	-0,81	-0,02	0,22
Pakistan	-0,79	-1,86	-0,35	-1,49	0,24	-1,39	-0,67	-0,03	-1,17	-0,41
Afghanis-tan	-0,88	-2,30	0,47	-1,37	-0,10	-1,85	-0,91	-0,15	-1,44	-0,27

Notes: The five colors designate the top tier (dark blue), second tier (blue), middle tier (light blue), fourth tier (yellow), and bottom tier (orange). Values in hatched cells have been estimated from the other wave.

Table 15: Cohesion and dimension scores – Wave 1 (2004-2008)

	cohw1	d11w1	d12w1	d13w1	d21w1	d22w1	d23w1	d31w1	d32w1	d33w1
Singapore	0,89	1,01	0,41	1,35	-0,37	1,31	2,58	0,56	1,70	-0,53
Hong Kong	0,53	0,43	0,19	0,90	-1,67	0,50	2,14	1,66	1,38	-0,78
Laos	0,52	0,25	-0,81	0,31	1,35	0,48	0,52	1,57	-0,66	1,70
Vietnam	0,45	0,00	-0,18	0,55	1,25	1,68	-0,44	0,15	0,88	0,20
Japan	0,27	0,47	0,73	1,37	-1,27	-0,82	0,64	-0,60	0,88	1,05
Thailand	0,25	1,26	-0,76	-0,06	1,00	0,32	-1,10	1,73	-0,56	0,43
Malaysia	0,23	0,57	-0,81	0,51	0,06	0,55	0,35	0,66	-0,34	0,49
Bhutan	0,15	0,56	0,17	0,16	0,75	1,31	-0,42	-0,42	0,48	-1,27
S. Korea	0,11	0,30	2,01	1,39	-2,24	-1,54	0,47	0,11	-0,30	0,84
Sri Lanka	0,10	0,53	-0,41	-1,33	0,58	0,47	-0,10	0,29	-0,32	1,21
China	0,07	-0,02	1,74	-0,08	-0,73	0,76	0,87	-0,82	0,94	-2,05
Philippines	0,03	0,45	-1,11	-0,01	0,07	-0,26	-0,09	0,68	-0,79	1,30
Taiwan	-0,02	0,57	1,11	1,14	-1,66	-1,69	0,75	-0,04	-0,20	-0,11
Nepal	-0,07	0,43	-0,99	-0,63	0,59	-0,09	-0,67	0,71	-0,14	0,12
Indonesia	-0,09	-0,51	0,59	-0,73	-0,73	-0,22	-1,14	0,14	1,39	0,43
Mongolia	-0,12	1,47	-0,69	1,17	0,51	-0,87	-1,40	-0,12	-2,25	1,07
India	-0,29	-0,85	0,24	-0,95	0,51	0,18	-0,46	-1,44	0,53	-0,40
Bangladesh	-0,41	-1,61	-0,68	-1,44	0,85	0,33	-0,25	-0,64	0,25	-0,52
Myanmar	-0,50	-0,30	-1,08	-1,02	0,22	0,20	-0,87	-0,21	0,16	-1,64
Cambodia	-0,58	-0,54	-1,71	0,35	-0,15	0,62	0,01	-2,05	-0,66	-1,09
Pakistan	-0,69	-2,13	1,32	-1,50	0,38	-1,13	-0,46	-1,71	-0,38	-0,56
Afghanistan	-0,84	-2,35	0,72	-1,46	0,71	-2,11	-0,93	-0,21	-1,98	0,09

Notes: The five colors designate the top tier (dark blue), second tier (blue), middle tier (light blue), fourth tier (yellow), and bottom tier (orange). Values in hatched cells have been estimated from the other wave.

Address | Contact

Bertelsmann Stiftung
Carl-Bertelsmann-Straße 256
33311 Gütersloh
Germany
Phone +49 5241 81-0

Dr. Peter Walkenhorst
Senior Project Manager
Germany and Asia Program
Phone +49 5241 81-81172
peter.walkenhorst@bertelsmann.de

www.social-cohesion.net

www.bertelsmann-stiftung.de